City of Muskegon
B 253
Jefferson & Western Parking Lot

Engineering Department
Public Services Building
1350 E. Keating, Muskegon 49442

TABLE OF CONTENTS

INTRODUCTION – PRE-BID
INVITATION FOR BIDS 2
NOTICE OF REQUIREMENT FOR AFFIRMATIVE ACTION 3
Executive Order 11246 ..... *3*
DEFINITIONS 4

PART 1 - BIDS
SECTION 1 – INSTRUCTIONS TO BIDDERS 7
1.0 INSTRUCTIONS TO BIDDERS 8
1.0.1 BIDS *8*
1.0.2 BID GUARANTY *8*
1.0.3 ALTERNATIVE BIDS *8*
1.0.4 INTERPRETATIONS AND/OR ADDENDA *9*
1.0.5 BIDDER'S RESPONSIBILITIES *9*
1.0.6 EQUAL OPPORTUNITY EMPLOYMENT REQUIREMENT *9*
1.0.7 EMPLOYMENT & PREVAILING WAGE & SALARY REQUIREMENTS *9*
1.0.8 SUBCONTRACTORS *10*
1.0.9 NON-COLLUSION AFFIDAVIT *10*
1.0.10 SECTION 3 CLAUSE (135.38) FOR FEDERALLY FUNDED PROJECTS *10*
1.0.11 STATEMENT OF BIDDER'S QUALIFICATIONS; ADDITIONAL INFORMATION *12*
1.0.12 TIME FOR RECEIVED BIDS *13*
1.0.13 WITHDRAWAL OF BIDS *13*
1.0.14 OPENING OF BIDS *13*
1.0.15 AWARD OF CONTRACT *13*
1.0.16 REJECTION OF BIDS; CITY'S RIGHTS *13*
1.0.17 EXECUTION OF CONTRACT AGREEMENT; PERFORMANCE & PAYMENT BONDS *13*
1.0.18 COMMENCEMENT NOTICE TO PROCEED *14*
SECTION 2 - BID PROPOSAL 15
1.1 CONTRACT BIDDER'S CHECKLIST 16
1.2 TRANSMITTAL LETTER FOR BID PROPOSAL 17
1.3 BIDDER CERTIFICATION & AGREEMENT 18
1.4 ADDEDUM NO I 20
1.5 BID TABULATION 21
1.6 BID BOND 23
1.7 NON-COLLUSION AFFIDAVIT OF PRIME BIDDER 25
1.8 LIST OF PROPOSED SUBCONTRACTORS 26
1.9 DISADVANTAGED CONTRACTOR AFFIDAVIT 27
1.10 STATEMENT OF BIDDER'S QUALIFICATIONS 28
1.10.1 SUMMARY OF BIDDER'S INFORMATION TO BE PROVIDED: *28*
1.11 DBE/MBE/WBE PROCUREMENT POLICY 30
1.11.1 POLICY STATEMENT: 2014-31 (E) *30*
1.11 STATEMENT OF NON-DISCRIMINATION *30*
1.11.3 FAIR SHARE GOALS *30*
1.11.4 GOOD FAITH EFFORTS *31*
1.11.5 DOCUMENTATION/REPORTING *32*
1.11.6 NON – COMPLIANCE *32*

PART 2 - AGREEMENT

2.0 AGREEMENT....34
2.1 PERFORMANCE BOND....36
2.2 LABOR & MATERIALMAN'S BOND....38
2.3 PERFORMANCE, LABOR & MATERIALMEN'S BONDS....40
2.4 LETTERS OF RECOMMENDATION IN LIEU OF PERFORMANCE BOND....41
2.5 NON-COLLUSION AFFIDAVIT OF SUBCONTRACTOR....42

PART 3 – GENERAL SPECIFICATIONS

SECTION 1 – PROJECT PERFORMANCE....44
3.0 PROJECT PERFORMANCE....45
3.0.1 ASSIGNMENT OR NOVATION....45
3.0.2 CONFLICT OF INTEREST....45
3.0.3 CITY'S AUTHORITY....45
3.0.4 OTHER CONTRACTS....46
3.0.5 TERMINATION OF CONTRACT....46
3.0.6 REVIEW BY AUTHORIZED REPRESENTATIVES....46
3.0.7 GENERAL GUARANTY....46
3.0.8 WARRANTY OF TITLE....47
3.0.9 PATENTS....47
3.0.10 PAYROLLS & BASIC RECORDS....47
3.0.11 SIGNS AS REQUIRED....47
3.0.12 NATIONAL HISTORIC PRESERVATION ACT OF 1966....48
3.0.13 CLEAN AIR ACT....48
3.0.14 SOIL EROSION & SEDIMENT CONTROL ACTS....48
3.0.15 SOIL REMOVAL & DUMPING ORDINANCE....48
3.0.16 PERMITS & CODES....48
3.0.17 TRAFFIC CONTROL....49
3.0.18 REQUIRED PROVISIONS DEEMED INSERTED....49
3.0.19 COMMUNICATIONS....49
3.0.20 REQUEST FOR SUPPLEMENTARY INFORMATION....50
3.0.21 PROGRESS SCHEDULE & NOTIFICATION REQUIREMENTS....50
3.0.22 PAYMENTS BY THE CONTRACTOR....50
3.0.23 SUBCONTRACTS....51
3.0.24 INSURANCE & INDEMNITY....51
3.0.25 MATERIALS & WORKMANSHIP....53
3.0.26 SUPERINTENDENCE BY CONTRACTOR....53
3.0.27 FITTING & COORDINATION OF THE WORK....53
3.0.28 MUTUAL RESPONSIBILITY OF CONTRACTORS....53
3.0.29 CARE OF THE WORK....53
3.0.30 SURVEY MONUMENTS....54
3.0.31 SANITARY FACILITIES....54
3.0.32 USE OF CITY WATER....54
3.0.33 USE OF PREMISES....55
3.0.34 PARTIAL USE OF SITE IMPROVEMENTS BY THE CITY....55
3.0.35 REMOVAL OF DEBRIS, CLEANING, ETC.....55
3.0.36 ACCIDENT PREVENTION....55
3.0.37 SPECIFICATIONS & DRAWINGS....56
3.0.38 SHOP DRAWINGS FROM THE CONTRACTOR....56
3.0.39 SAMPLES, CERTIFICATES & TESTS....57
3.0.40 INSPECTION BY THE CITY....58

3.0.41 CHANGES IN THE WORK *59*
3.0.42 CHANGE ORDERS *59*
3.0.43 DISPUTES & CLAIMS *60*
3.0.44 CLAIMS FOR EXTRA COST *60*
3.0.45 DELAYS & LIQUIDATED DAMAGES *61*
3.0.46 PAYMENTS TO THE CONTRACTOR *61*
3.1 TIME CHANGE ORDER 64
3.2 CONTRACT CHANGE ORDER 65
3.3 CONTRACTOR'S CERTIFICATE & RELEASE REQUEST FOR FINAL PAYMENT 66
3.4 CONTRACTOR AFFIDAVIT - SURETY RELEASE 68
3.5 CONSENT OF SURETY 69
SECTION 2 70
3.6 AFFIRMATIVE ACTION 71
SECTION 3 72
3.7 ADOPTED LABOR STANDARDS PROVISIONS 73
3.8 EQUAL OPPORTUNITY CLAUSE 73
3.9 ANTI-KICKBACK ACT 74
SECTION 4 75
3.10 PREVAILING WAGE DECISION 76

PART 4 – ENGINEERING SPECIFICATIONS
DIVISION 1 GENERAL DEFINITIONS 78
DIVISION 17 PUBLIC UTILITIES 79

PART 5 - PROJECT SPECIAL SPECIFICATIONS
5.0 PROJECT SPECIAL SPECIFICATIONS 82
5.0.1 CONTRACT COORDINATION *82*
5.0.2 GOVERNING ORDER *82*
5.0.3 CITY'S RIGHT TO REDUCE OR INCREASE QUANTITIES *82*
5.0.4 PERMISSION TO CONSTRUCT *82*
5.0.5 LETTERS OF RECOMMENDATION IN LIEU OF PERFORMANCE BOND *82*
5.0.6 SALVAGE MATERIALS *82*
5.0.7 LIQUIDATED DAMAGES; TIME OF THE ESSENCE *82*
5.0.8 DEFECTIVE MATERIALS & WORK *83*
5.0.9 CORRECTING WORK *83*
5.0.10 RETENTION OF IMPERFECT WORK *83*
5.0.11 ACCIDENT PREVENTION & SAFETY *83*
5.0.12 CONFINED SPACES. *84*
5.0.13 SUNDAY & NIGHT WORK *84*
5.0.14 BID TABULATION SHEET *84*
5.0.15 PUBLIC ACT NO. 57 OF 1998, SECTION 2 ..... *84*
5.0.16 LOCAL PREFERENCE POLICY *84*
5.0.17 TERRACE GRADING *85*
5.0.18 SODDING, SEEDING, TOP SOIL, FERTILIZER & MULCH *85*
5.0.19 HYDROSEEDING *85*
5.0.20 TRAFFIC CONTROL *85*
5.0.21 SAW CUTS *86*
5.0.22 SOIL DENSITY *86*
5.0.23 ADJUSTING SMALL CASTINGS *86*
5.0.24 TRENCH REPAIR - VARIOUS TYPES *86*
5.0.25 SOIL EROSION CONTROL *89*

5.1 FOR ALL PAY ITEMS 90
5.2 PROGRESS CLAUSE 91
5.3 MAINTAINING TRAFFIC 92
5.3.1 GENERAL 92
5.3.2 SPECIFIC REQUIREMENTS 92
5.3.3 TRAFFIC CONTROL DEVICES 92
5.3.4 CONSTRUCTION INFLUENCE AREA (CIA) 92
5.3.5 TRAFFIC RESTRICTIONS 92
5.3.6 HOLIDAY WORK RESTRICTIONS 93
5.3.7 TEMPORARY SIGNS 93
5.3.8 MEASUREMENT & PAYMENT 93
5.4 UTILITY COORDINATION 94
5.4.1 PUBLIC UTILITIES 94
5.4.2 UTILITY COORDINATION CLAUSE 95
5.5 HEDGE REMOVAL 96
5.5.1 DESCRIPTION 96
5.5.2 CONSTRUCTION METHODS 96
5.5.3 MEASUREMENT & PAYMENT 96
5.6 DR STRUCTUE, REM, MODIFIED 97
5.6.1 DESCRIPTION 97
5.6.2 CONSTRUCTION METHODS 97
5.6.3 MEASUREMENT & PAYMENT 97
5.7 PAVT, REM, MODIFIED 98
5.7.1 DESCRIPTION 98
5.7.2 CONSTRUCTION METHODS 98
5.7.3 MEASUREMENT & PAYMENT 98
5.8 DRIVEWAY, NONREIF CONC, _INCH, MODIFIED 99
5.8.1 DESCRIPTION 99
5.8.2 MATERIALS 99
5.8.3 CONSTRUCTION METHODS 99
5.8.4 MEASUREMENT & PAYMENT 99
5.9 PAVT MRKG, BLUE 100
5.9.1 DESCRIPTION 100
5.9.2 MATERIALS 100
5.9.3 CONSTRUCTION METHODS 100
5.9.4 MEASUREMENT & PAYMENT 100
5.10 HYDROSEEDING 101
5.10.1 DESCRIPTION 101
5.10.2 MATERIALS 101
5.10.3 CONSTRUCTION METHODS 101
5.10.4 MEASUREMENT & PAYMENT 101
5.11 FLOWABLE FILL 102
5.11.1 DESCRIPTION 102
5.11.2 MATERIALS 102
5.11.3 CONSTRUCTION 102
5.11.4 TRANSPORTING 102
5.11.5 MEASUREMENT & PAYMENT 102
5.12 DECORATIVE CONCRETE 103
5.12.1 DESCRIPTION 103
5.12.2 MATERIALS 103

5.12.3 EQUIPMENT *104*
5.12.4 CONSTRUCTION METHODS *104*
5.12.5 MEASUREMENT & PAYMENT *108*
5.13 CATCH BASIN SPECIAL DETAIL 109
5.13.1 DESCRIPTION *109*
5.13.2 MATERIALS *109*
5.13.3 CONSTRUCTION METHODS *109*
5.13.4 MEASUREMENT & PAYMENT *109*
5.14 CATCH BASIN 2FT ID SPECIAL DETAIL 110
5.14.1 DESCRIPTION *110*
5.14.2 MATERIALS *110*
5.14.3 CONSTRUCTION METHODS *110*
5.14.4 MEASUREMENT & PAYMENT *110*
5.15 DR STRUCTURE COVER, MODIFIED 111
5.15.1 DESCRIPTION *111*
5.15.2 MATERIALS *111*
5.15.3 CONSTRUCTION METHODS *111*
5.15.4 MEASUREMENT & PAYMENT *111*
5.16 DECORATIVE BLOCK WALL SPECIAL DETAIL 112
5.16.1 FENCE BLOCK SPECIFICATIONS & INSTALLATION INSTRUCTIONS *112*
5.16.2 MEASUREMENT & PAYMENT *115*
5.16.3 GRAPHIC CONCEPTUAL DESIGN *116*

PART 6 - MDOT SPECIFICATIONS
R-1-G DRAINAGE STRUCTURES 120
R-7-B COVER B 129
R-9-D COVER D 131
R-29-I DRIVEWAY OPENINGS & APPROACHES & CONCRETE SIDEWALK 133
R-30-G CONC CURB GUTTER 137
R-83-C UTILITY TRENCHES 139
R-96-E SOIL EROSION & SEDIMENTATION CONTROL MEASURES 144

PART 7 - APPENDICIES
PRE-BID DOCUMENTS .....
ADDENDUM NO. 1 .....
PART 1 – SIGNED BIDDER DOCUMENTS .....
TRANSMITTAL LETTER FOR BID PROPOSAL .....
BIDDER CERTIFICATION AND AGREEMENT .....
BID TABULATION .....
BID BOND PROPOSAL .....
GENERAL POWER OF ATTORNEY .....
NON-COLLUSION AFFIDAVIT OF PRIME BIDDER .....
LIST OF PROPOSED SUBCONTRACTORS .....
DISADVANTAGED CONTRACTOR AFFIDAVIT .....
PART 2 – SIGNED AGREEMENT DOCUMENTS .....

INTRODUCTION – PRE-BID

INVITATION FOR BIDS

Project Title: Jefferson & Western Parking Lot

Project Number: B 253

The City of Muskegon will receive sealed bids until **2:00 p.m. local time on Tuesday, April 3, 2018,** at the City Clerk's Office, City Hall, 933 Terrace Street, Muskegon, Michigan, where all bids will be publicly opened and read aloud.

Items of work include:

4,200syd of HMA parking lot. Construction includes pavement removal, storm sewer, HMA pavement, concrete curb and gutter, concrete sidewalk, 300sqft decorative block wall and pavement markings on Jefferson & Western Parking Lot. Block 310 in the City of Muskegon, Muskegon County.

Copies of Plans and Specifications may be obtained on or after Friday, March 16, 2018 in the City Clerk's office upon the submission of a non-refundable $40.00 fee for each set. An amount equal to five percent (5%) of the Bid must be submitted with each Bid Proposal in one of three forms acceptable to the City of Muskegon.

Contract documents may be examined at the following locations:

- City of Muskegon, City Hall Building
- Grand Rapids Builders Exchange

Attention is called to the fact that the City requires: that the Contractor consider hiring local work force insofar as possible; that not less than the salaries and wages set forth in the Specifications must be paid; that 14% minority and 6.9% female are the goals established for participation in each trade; that the Contractor must ensure employees and applicants for employment are not discriminated against based upon their race, creed, color, religion, sex, national origin, handicapped condition nor veteran background; and that all pertinent regulations must be complied with. No bid may be withdrawn within sixty (60) days after bid opening.

The City of Muskegon reserves the right to reject any or all bids or to waive any informalities or irregularities in the bidding.

A Pre-Bid Conference will be held in the Conference Room at the City of Muskegon Public Services Building located at 1350 E Keating Avenue at 9:30 a.m. on, Friday, March 23, 2018, at which time and place any questions regarding this Project should be presented. Minutes from the Pre-Bid Conference will become an Addendum to the Contract.

CITY OF MUSKEGON, MICHIGAN
By: Ann Meisch, City Clerk

PUBLISH: 3/16/2018

ADA POLICY

The City will provide necessary appropriate auxiliary aids services, for example, signers for the hearing impaired, audio tapes for the visually impaired, etc., for disabled persons who want to attend the meeting, upon twenty-four hour notice to the City. Contact:

Ann Marie Meisch, City Clerk
City of Muskegon, City Hall
933 Terrace Street, Muskegon, MI 49440
(231) 724-6705 or TDD (231) 724-6773

NOTICE OF REQUIREMENT FOR AFFIRMATIVE ACTION

Executive Order 11246

1. The Bidder's attention is called to the "Equal Opportunity Clause" and the "Standard Adopted Equal Employment Specifications" set forth in Part 3, Section 2, of these Documents.

2. The goals and the timetables for minority and female participation, expressed in percentage terms for the Contractor's aggregate workforce in each trade on all construction work in the covered area, are as follows:

GOALS FOR PARTICIPATION IN EACH TRADE

TRADE	MINORITY	FEMALE
ALL	**14%**	**6.9%**

These goals are applicable to all the Contractor's construction work (whether or not it is Federal or Federally-assisted) performed in the covered area. If the Contractor performs construction work in a geographical area located outside of the covered area, it shall apply the goals established for such geographical area where the work is actually performed. With regard to this second area, the Contractor also is subject to the goals for both its federally involved and non-federally involved construction.

The Contractor's compliance with the Executive Order and regulations in 41 CFR Part 60-4 shall be based on its implementation of the Equal Opportunity Clause, specific affirmative action obligations required by the specifications set forth in 41 CFR 60-4.3(a), and its efforts to meet the goals. The hours of minority and female employment and training must be substantially uniform throughout the length of the Contract, and in each trade. The Contractor shall make a good faith effort to employ minorities and women evenly on each of its projects. The transfer of minority or female employees or trainees from contractor to contractor or from project to project for the sole purpose of meeting the contractor's goals shall be a violation of the Contract, the Executive Order, and the regulations in 41 CFR Part 60-4. Compliance with the goals will be measured against the total work hours performed.

3. The Contractor shall provide written notification to the Director of the Office of Federal Contract Compliance Programs within 10 working days of award of any construction subcontract in excess of $10,000 at any tier for construction work under the Contract resulting from this solicitation. The notification shall list the name, address and telephone number of the subcontractor; employer identification number of the subcontractor; estimated dollar amount of the subcontract; estimated starting and completion dates of the subcontract; and the geographical area in which the contract is to be performed.

4. As used in this Notice, and in the Contract resulting from this solicitation, the "covered area" is the City of Muskegon, County of Muskegon, and State of Michigan.

DEFINITIONS

Within these Documents, the following meanings shall be given to the terms defined:

ADDENDA or ADDENDUM – Any changes, revisions, additions or clarifications of or to the Contract Documents which have been duly issued by the City to Bidders prior to the time of awarding or executing the Contract Agreement.

AUTHORIZED REPRESENTATIVE – Any person or persons authorized to represent the City of Muskegon by its governing body for the purpose of directing or having in charge the work embraced in this Contract, acting directly or indirectly through the responsible party having general charge of this work, and/or for monitoring, coordinating and inspecting the work and activities involved.

BID or BID PROPOSAL – The written offer of the Bidder, as required by the City, for the work proposed.

BID BOND/GUARANTY – The security required in these Documents and furnished by the Bidder as a guaranty of good faith to enter into a contract for the work proposed.

BIDDER or PRIME BIDDER – That individual, corporation or firm submitting a proposal for consideration by the City to perform the work proposed in these Documents.

CITY – CITY OF MUSKEGON - The City of Muskegon and/or its authorized representative(s); also may be referred to in portions of these Documents as owner, grantee, local public agency, or local government.

CITY COMMISSION – The governing body of the City of Muskegon which retains the right of final approval of all contractors, subcontractors, contracts and payments under any contracts.

CONTRACT – The Agreement executed by the City and the Contractor, of which this section is a part.

CONTRACT DOCUMENTS – Means and shall include the executed Agreement, any Addenda, Invitation for Bids, Instructions to Bidders, signed Bid Proposal, all Parts and Sections of the General, Technical and/or Special Specifications, any drawings, maps, plans, etc., and any forms or formats and documents included within the book forming these Documents.

CONTRACT PERFORMANCE – The act of complying with these Contract Documents to the successful completion of the Project by performing the work necessary to do so.

CONTRACT PRICE – That figure agreed upon through the bidding procedure as acceptable to the City and indicated as such in the Agreement executed by the Contractor and the City.

CONTRACT TIME – The date for completion or length of time until completion, of the work embraced in this Contract as stipulated in the Agreement executed by the Contractor and the City.

CONTRACTOR or SUCCESSFUL BIDDER – The person, corporation or firm whose bid was accepted by the City, resulting in the execution of the Agreement to perform the work under the terms of these Documents.

DRAWINGS/PLANS – Approved drawings or reproduction of drawings pertinent to the construction or details of the work covered by this Contract.

LABORATORY – The testing laboratory of the City or any other laboratory which may be designated by the City for the purpose of inspecting, examining and determining the suitability of materials and the quality of the products used in the performance of this Contract.

LETTERS OF RECOMMENDATION – IN LIEU OF PERFORMANCE BOND – Those statements presented by the Bidder to the City for consideration in lieu of a performance bond where applicable and in strict accordance with Part 1, Section 1, paragraph 17(e), and the instructions contained in these Documents.

PERFORMANCE/LABOR AND MATERIALMEN'S BONDS – The statutory bonds, executed by the Contractor and a surety, guaranteeing the performance of the Contract and the payment of all lawful indebtedness pertaining thereto.

PREVAILING WAGE DECISION - That document, received from the U.S. Department of Housing and Urban Development or the State of Michigan Department of Labor as requested by the City, detailing the current wage rates which, if included in this Contract, are binding upon the Contractor and all subcontractors as the minimum wages to be paid during the life of this Contract.

SITE – Also referred to as PROJECT SITE or PROJECT AREA, indicating the location of the Project as generally described in these Documents.

SUBCONTRACT – An agreement executed by the Contractor with another individual, corporation or firm for work or a portion of the work embraced in this Contract. (An asterisk (*) in the right-hand margin indicates subcontract language or requirements throughout Parts 1, 2 and 3 of these Documents.)

SUBCONTRACTOR – A person, corporation or firm supplying labor and/or materials for work at the Site of this Project for the Contractor under a Subcontract.

SURETY – The corporate body which is bound with and for the Contractor for the performance of this contract and for the payment of all lawful indebtedness pertaining thereto.

SPECIFICATIONS – GENERAL – Refers to specifications pertinent to the performance of any City Project anticipated to exceed $2,000, as provided in Parts 1, 2 and 3 of these Documents.

SPECIFICATIONS – TECHNICAL – Refers to those Specifications pertinent to this Project and includes information regarding materials, products, etc., as provided in PART 4 of these Documents.

SPECIFICATIONS – SPECIAL – Refers to special information items pertinent to only this Project and includes Project Description, location, measurements, maps, drawings, etc.

SPECIFICATIONS – (without particular included as above) Refers to General Specifications, Technical Specifications and/or Special Specifications outlined in this Document.

WORK ON (OR AT) THE PROJECT or PROJECT SITE – Work to be performed under this Contract at the location of this Project, including transportation of materials and supplies to or from the Site by employees of the Contractor and/or Subcontractors.

PART 1 - BIDS

SECTION 1 – INSTRUCTIONS TO BIDDERS

1.0 INSTRUCTIONS TO BIDDERS

1.0.1 BIDS

a. Bidding documents to be submitted must remain attached within this Contract Document.

b. All bids submitted shall be on forms provided without alterations or interlineations and shall be subject to all requirements of these Instructions to Bidders and all the forms and Documents immediately following these Instructions in Section 2, Bid Proposal.

c. All Bid Proposals submitted for consideration shall be enclosed in a sealed envelope which is clearly labeled "Bid Documents" with the Project name and/or number, the name of Bidder, the date and time of Bid Opening written on the envelope to prevent premature opening.

d. If unit prices are requested, the Unit Price for each of the several items in the Bidder's proposal shall include its pro rata share of overhead so that the sum of the products obtained by multiplying the quantity for each item by the unit price represents the total bid. Should conditions make it necessary to revise the quantities, a limit will then be fixed for such increased or decreased quantities. Should the net monetary value of all such changes increase or decrease the original price by more than twenty-five percent (25%) negotiated price change shall be allowed, if warranted. Any bid not conforming to this requirement may be rejected.

1.0.2 BID GUARANTY

a. No Bid will be considered unless it is accompanied by a Bid Guaranty of not less than five percent (5%) of the amount of the Bid to ensure the execution of the Contract and the furnishing of surety bond or bonds by the successful Bidder, as required by the Contract Documents. Cash deposits will not be accepted. Negotiable U.S. Government Bonds (at par value) and certified checks or bank drafts, made payable to the **City of Muskegon**, may be used, or a bid bond in the format provided which shall be secured by a guaranty or a surety company listed in the latest issue of U.S. Treasury Circular 570, and shall be within the maximum amount specified for such company in said Circular.

b. Revised Bids submitted before the opening of Bids, whether forwarded by mail or telegraphic communication, if representing an increase in excess of two percent (2%) of the original bid, must have the Bid Guaranty adjusted accordingly; otherwise the Bid will not be considered.

c. The Bid Guaranty of unsuccessful Bidders, or the amount thereof, will be returned as soon as practicable after the awarding of the contract. The Bid Guaranty of any Bidder withdrawing his/her Bid in accordance with the conditions set forth in Paragraph 13 hereof will be returned promptly.

d. When telegraphic modifications of Bids are received as provided above, Bidders are cautioned that such modifications shall make the Bid as modified or amended subject to rejection if not explicit and/or in any sense are subject to misinterpretation.

1.0.3 ALTERNATIVE BIDS

No alternative bids will be considered unless alternative bids are specifically requested.

1.0.4 INTERPRETATIONS AND/OR ADDENDA

a. No oral interpretation will be made to any Bidder as to the meaning of the Documents or any part thereof. A request for any interpretation will be in writing to the City of Muskegon, and any such request received seven (7) or more days before the scheduled Bid Opening will be considered.

b. Every interpretation made will be in writing in the form of an Addendum to the Contract itself and, when issued, will be on file in the City Clerk's office at least five (5) days prior to the Bid Opening for each Bidder's review.

1.0.5 BIDDER'S RESPONSIBILITIES

a. Site Inspection. Each Bidder will assume the responsibility for visiting the site of the proposed work and for fully acquainting himself/herself with the conditions existing there relating to construction and labor, and should fully inform himself/herself as to the facilities involved, the difficulties and restrictions attending the performance of the Contract.

b. Knowledge of Bid and Contract Documents. The Bidder is responsible for thoroughly examining and familiarizing himself/herself with the Bid and Contract Documents, any Drawings, Specifications and Addenda.

c. Addenda to Contract Documents. All Bidders will assume the responsibility to make inquiry as to the Addenda issued, knowing that all such Addenda become part of the Contract. All Bidders shall be bound by any Addenda whether or not it was received or reviewed.

d. Claims on Basis of Failure to Receive or Review Information. A successful Bidder, through the execution of this Contract, shall in no way be relieved of any obligation due to his/her failure to receive or examine any form or legal instrument, or due to the failure to visit the site and acquaint himself/herself with the existing conditions.

   The City Commission will be justified in rejecting any claims submitted on the basis of 5.a, b, or c above.

1.0.6 EQUAL OPPORTUNITY EMPLOYMENT REQUIREMENT

The attention of Bidders is particularly called to the requirement for ensuring that employees and applicants for employment are not discriminated against because of their race, color, religion, sex or national origin, nor because the employee or applicant is a disabled or Viet Nam era veteran or otherwise handicapped, as outlined in Part 3, Section 2 of these Documents.

1.0.7 EMPLOYMENT AND PREVAILING WAGE AND SALARY REQUIREMENTS

The attention of Bidders is particularly called to the requirements covered in Part 3, Section 4 of these Documents concerning the payment of not less than the prevailing wage and salary rates specified, and in regard to the conditions of employment with respect to certain categories and classifications of employees. These rates of pay are the minimums to be paid during the life of this Contract.

The City of Muskegon requires that the Contractor must hire local trades and labor employees from the City of Muskegon, County of Muskegon and/or this SMSA (Standard Metropolitan Statistical Area) for the duration of this Project, insofar as these are available to perform the necessary work. Supervisory and/or technical staff officials are exempt from this requirement.

It is therefore the responsibility of the Bidder to inform himself/herself as to local labor conditions, labor supply, overtime compensation, health and welfare contributions, and prospective changes or adjustments of rates.

1.0.8 SUBCONTRACTORS

Any Bidder submitting a Bid shall include a list of proposed subcontractors on the form provided in Part 1, Section 2 of these Documents.

The attention of Bidders is called to the Contractor's liability for all subcontractors as provided in the various sections and paragraphs on these Documents, generally indicated by an asterisk (*) in the right-hand margin.

1.0.9 NON-COLLUSION AFFIDAVIT

a. Each Bidder submitting a bid for work, or any portion thereof, covered by these Documents, shall execute an Affidavit to the effect that he/she has not colluded with any other person, firm or corporation in regard to any Bid submitted, in the same or similar format as provided in Part 1 Section 2 of these Documents.

b. The successful Bidder shall secure an Affidavit to the same effect from any proposed subcontractor, before executing any subcontract, in the same or similar format as provided in Part 1, Section 2 of these Documents.

1.0.10 SECTION 3 CLAUSE (135.38) FOR FEDERALLY FUNDED PROJECTS

a. The work to be performed under this contract is subject to the requirements of section 3 of the Housing and Urban Development Act of 1968, as amended, 12 U.S.C. 1701u (section 3). The purpose of section 3 is to ensure that employment and other economic opportunities generated by HUD assistance or HUD-assisted projects covered by section 3, shall, to the greatest extent feasible, be directed to low- and very low-income person, particularly persons who are recipients of HUD assistance for housing.

b. The parties to this contract agree to comply with HUD's regulations in 24 CFR part 135, which implement section 3. As evidenced by their execution of this contract, the parties to this contract certify that they are under no contractual or other impediment that would prevent them from complying with the part 135 regulations.

c. The contractor agrees to send to each labor organization or representative or worker with which the contractor has a collective bargaining agreement or other understanding, if any, a notice advising the labor organization or workers' representative of the contractor's commitments under this section 3 clause, and will post copies of the notice in conspicuous places at the work site were both employees and applicants for training and employment positions can see the notice. The notice shall describe the section 3 preference, shall set forth minimum number and job titles

subject to hire, availability of apprenticeship and training positions, the qualifications for each of the positions; and the anticipated date the work shall begin.

d. The contractor agrees to include the section 3 clause in every subcontract subject to compliance with regulations in 24 CFR part 135, and agrees to take appropriate action, as provided in an applicable provision of the subcontract or in the section 3 clause, upon the finding that the subcontractor will not subcontract with any subcontractor where the contractor has notice or knowledge that the subcontractor has been found in violation of the regulations in 24 CFR part 135.

e. The contractor will certify that any vacant employment positions, including training positions, that are filled (1) after the contractor is selected but before the contract is executed, and (2) with person other than those to whom the regulations of 24 CFR part 135 require employment opportunities to be directed, were not filled to circumvent the contractor's obligations under the 24 CFR part 135.

f. Noncompliance with HUD's regulations in 24 CFR, part 135 may result in sanctions, termination of this contract for default, and debarment or suspension from future HUD assisted contracts.

g. With respect to work performed in connections with section 3 covered Indian housing assistance, section 7(b) of the Indian Self-Determination and Education Assistance Act (25 U.S.C. 450e) also applies to the work to be performed under this contract. Section 7(b) requires that to the greatest extent feasible (i) preference and opportunities for training and employment shall be given to Indians, and (ii) preference in the award of contracts and subcontracts shall be given to Indian organizations and Indian-owned Economic Enterprises. Parties to this contract that are subject to the provisions of section 3 and section 7(b) agree to comply with section 3 to the maximum extent feasible, but not derogation of compliance with section 7(b).

Examples:

1. Who are Section 3 residents? – Residents of public housing and low income person who live in the area in which a HUD-assisted project is located.

2. What is a Section 3 business? – A business that is owned by Section 3 residents; or employs Section 3 residents in full-time positions; or subcontracts with businesses which provide economic opportunities to low income persons. (CDBG)

3. What types of economic opportunities are available under Section 3? – a. Administrative/Management: accounting, bookkeeping, payroll, purchasing, research, word processing b. Services: appliance repair, carpet installation, catering computer/information, florists, janitorial, landscaping, manufacturing, marketing, photography, printing, transportation C. Construction: architecture, bricklaying, carpentry, cement/masonry,

   demolition, drywall, electrical, elevator construction, engineering, fencing, heating, iron works, machine operation, painting, plastering, plumbing, surveying, tile setting.

4. Who will award the economic opportunities? – Recipients of HUD financial assistance and their contractors and subcontractors are required to provide economic opportunities to the greatest extent feasible, consistent with existing Federal, State and local laws and regulations.

5. Who receives priority under Section 3? – a. For training and employment: persons in public and assisted housing; person in the neighborhood; participants in HUD Youthbuild programs; homeless person b. For contracting: business which fit the definition of a Section 3 business.

6. How can businesses find Section 3 residents to work for them? - By recruiting in the neighborhood and public housing developments to tell them about available training and job opportunities. Distributing flyers, posting signs, placing ads, and contacting resident organizations and local community development and employment agencies to find potential workers are a few effective ways of getting jobs and people together.

7. How can businesses & low income people find out more about Section 3? Contact the Fair Housing and Equal Opportunity representative at your nearest HUD office.

8. What if it appears an entity is not complying with Section 3? - There is a complaint process. Section 3 residents and business concerns may file complaints if they think a violation of Section 3 requirements has occurred where HUD-funded project is planned or underway. Complaints will be investigated; if appropriate, voluntary resolutions will be sought. A complaint that cannot be resolved voluntarily can result in an administrative hearing.

9. Will HUD require compliance? – Yes. HUD investigates complaints and monitors the performance of recipients and contractors. HUD examines employment and contract records for evidence of actions taken to train and employ Section 3 residents and train and employ Section 3 residents and to award contracts to Section 3 businesses.

10. How can Section 3 businesses or residents complain about a violation of Section 3 requirements? – They can file a complaint in writing to the local HUD Office or to: The Assistant Secretary for Fair Housing and Equal Opportunity, U.S. Department of Housing and Urban Development 451 Seventh Street, SW, Rm. 5100 Washington, DC 20410-2000. A written complaint should contain:

    a. Name and address of the person filing the complaint;

    b. Name and address of subject of complaint (HUD recipient contractor);

    c. Description of acts or omissions in alleged violation of section 3;

    d. Statement of corrective action sought.

1.0.11 STATEMENT OF BIDDER'S QUALIFICATIONS; ADDITIONAL INFORMATION

a. Upon request, each Bidder shall submit a Statement of Bidder's Qualifications in accordance with the information requested in Part 1, Section 2, and, when specifically requested by the City, shall submit a detailed Financial Statement, particularly in lieu of a Performance Bond.

b. Any Bidder shall furnish any data and information requested by the City Commission in its attempt to determine the ability of the Bidder to perform his/her obligations under the Contract.

1.0.12 TIME FOR RECEIVED BIDS

Bids received prior to the advertised hour of opening will be kept securely sealed. The official whose duty it is to open the Bids will decide when the specified time has arrived, and no Bid received thereafter will be considered.

1.0.13 WITHDRAWAL OF BIDS

Bids may be withdrawn on written or telegraphic request dispatched by the Bidder in time for delivery in the normal course of business prior to the time fixed for opening; provided that written confirmation of any telegraphic withdrawal over the signature of the Bidder is placed in the mail and post-marked prior to the time set for Bid opening.

1.0.14 OPENING OF BIDS

At the time and place fixed for the opening of Bids, the City Clerk will cause to be opened and publicly read aloud every Bid received within the time set for receiving Bids, irrespective of any irregularities therein. Bidders and other persons properly interested may be present in person or by representative.

1.0.15 AWARD OF CONTRACT

If the Contract is awarded, it will be awarded to the responsible Bidder submitting the lowest Bid complying with the conditions set forth in these Documents. The successful Bidder will be notified at the earliest possible date.

1.0.16 REJECTION OF BIDS; CITY'S RIGHTS

a. The City Commission reserves the right to reject any and all Bids, and to waive any informality in Bids received, whenever such rejection or waiver is in its own best interest.

b. The City Commission may consider as irregular and reject any Bid on which there is an alteration.

c. The City Commission shall have the right to take such steps as it deems necessary to determine the ability of the Bidder to perform his/her obligations under the Contract.

d. The right is reserved to reject any Bid where an investigation of the available evidence and/or information provided does not satisfy the City Commission of the Bidder's capacity to carry out the terms of the Contract.

1.0.17 EXECUTION OF CONTRACT AGREEMENT; PERFORMANCE AND PAYMENT BONDS

a. Subsequent to the award and within ten (10) days after the Documents have been presented for signature, the successful Bidder shall execute the Agreement and deliver the requested number of copies to the City of Muskegon.

b. Execution of the Agreement will require completion of the work in accordance with the Contract in its entirety.

c. Upon delivery of the executed Contract Documents, the successful Bidder shall furnish the requisite bonds, in the penal sum not less than the amount of the Contract as awarded, as security for the faithful performance of the Contract and of the payment of all persons, firms or corporations to whom the Bidder as Contractor may become legally indebted, except as provided in paragraph (e) below.

d. Such bonds shall be completed in accordance with the Instructions in Part 1 Section 2, and shall bear the same date as, or a date subsequent to, that of the Agreement.

   The surety bond shall be signed by a guaranty or the surety company listed in the latest issue of the U.S. Treasury Circ. 570, and the penal sum shall be within the maximum specified for such company in said Circular.

e. In cases where this Contract is $50,000 OR LESS and the successful Bidder is unable to, or chooses not to, provide the appropriate Performance Bonds, the Bidder may submit four letters of sincere recommendation as to his/her prior performance to the City Manager for consideration in lieu of a Performance Bond, in basically the form described in Part 2 of these Documents.

   This action must be taken prior to the execution of the Contract Agreement and the four letters must be accompanied by a statement from the Bidder, which contains the minimum requirements indicated for "Statement of Bidder's Qualifications". Upon City Manager and/or City Commission acceptance of the letters in lieu of the Performance Bond, the Contract Agreement shall be so executed.

f. Failure of the successful Bidder to execute such number of Contract Documents as requested, to supply the required bonds or letters of recommendation with the Bidder's statement, and/or to meet the prescribed time limits, shall constitute a default.

g. Upon such default, the City Commission may either award the Contract to the next lowest responsible bidder or re-advertise for bids.

   The Commission may further charge against the defaulting Bidder the difference between the amount of his/her Bid and the amount for which a Contract for the work is subsequently executed, irrespective of whether the amount then exceeds the amount of the Bid Bond.

   If a more favorable bid is received by re-advertising, the defaulting Bidder shall have no claim against the City of Muskegon.

1.0.18 COMMENCEMENT NOTICE TO PROCEED

The Contractor shall commence work only upon delivery of a Notice to Proceed from the City. In the event the said notice is not delivered within ten (10) days of the date of this agreement, then the dates for completion and any other performance dates shall be adjusted without further agreement so that the performance and completion dates shall be delayed the number of days in excess of ten (10) after the execution of the contract during which the City did not deliver the notice.

SECTION 2 - BID PROPOSAL

1.1 CONTRACT BIDDER'S CHECKLIST

THIS FORM IS A REFERENCE TOOL FOR BIDDING CONTRACTORS

The following forms ***MUST*** be completed:

Form	Completed? Yes	Completed? No
1. Transmittal Letter for Bid Proposal (must acknowledge addenda received)		
2. Bidder Certification and Agreement		
3. Bid Tabulation		
4. Bid Bond Proposal (must be 5% of total bid)		
5. Non-Collusion Affidavit of Prime Bidder		
6. List of Proposed Sub-Contractors		
7. Disadvantaged Contractor Affidavit (if applicable)		

Actual Completion of All Required Forms is the **Sole Responsibility of the Bidder**

FAILURE TO COMPLETE THE NECESSARY FORMS MAY RESULT IN BID REJECTION.

1.2 TRANSMITTAL LETTER FOR BID PROPOSAL

Bidder/Company Name _____

Name & Title of Head of Company _____

Street Address _____

City, State, ZIP _____

Date _____

CITY OF MUSKEGON, MICHIGAN
933 TERRACE ST.
MUSKEGON, MI 49443-0536

RE: Project No: B 253

Project Title: Jefferson & Western Parking Lot

Gentlemen:

Having examined the Bid Specifications and Contract Documents, including all forms and instructions, and the site of the proposed work, and being familiar with all of the conditions surrounding the construction of the proposed project, including the availability of materials and labor, and having received and reviewed the following Addenda:

Addendum No. 1

I/We hereby propose to furnish all labor, materials and supplies, and to construct the project in accordance with the Contract Documents and at the prices indicated in the attached Bid Proposal. Submitted prices are to cover all expenses incurred in performing the work required under the Contract Document, of which this letter and attached Proposal are a part.

In accordance with the Instructions to Bidders, all appropriate documents, forms, etc., have been properly completed and are attached hereto, along with the Bidder Certification and Agreement, List of Subcontractors, Non-Collusion Affidavits, and the proper Bid Guaranty.

I/We hereby respectfully submit the attached Bid Proposal for consideration by the City of Muskegon on the above-referenced Project.

_____
Signature of Bidder/Representative

_____
Printed Name and Title

1.3 BIDDER CERTIFICATION AND AGREEMENT

PART I. The Undersigned hereby agrees:

That he/she has examined the Bid Specifications/Contract Documents, including specifications, forms and instructions;

That he/she has received and reviewed the following Addenda:

ADDENDUM NO. 1 _____

_____

_____

That he/she has examined the Site of the proposed work and is familiar with all of the conditions surrounding the construction of the proposed project and the availability of materials and labor.

PART II. The Undersigned hereby agrees:

That he/she will enter into a contract to furnish the labor, materials, tools and construction equipment necessary for the full and complete execution of the work at and for the prices indicated in his/her official Bid Proposal, if said Proposal is accepted by the City;

That, at the time of execution of said Contract, he/she will furnish requisite bonds with such sureties (or letters of recommendation accompanied by a Bidder's Statement) for the faithful performance of the Contract, for the payment of all materials used therein, and for all labor expended thereon in accordance with the forms and instructions provided;

That he/she will construct the project in accordance with the Contract Documents within the specified time.

PART III. The Undersigned hereby agrees:

- **To commence work within 10 days after the date of a "Notice to Proceed" from the City, anticipated prior to May 1, 2018**
- **To complete the work on, or before July 31, 2018, or within ten (10) weeks from "Notice to Proceed"**
- **To comply with all applicable Adopted Guidelines and requirements, wage rates, labor standards, equal opportunity requirements, subcontract (or) requirements, and any other specifications indicated or referred to within these Contract Documents.**

The Undersigned herewith attaches an Affidavit in proof that he/she has not entered into a collusive agreement with any person in respect to this Bid or any other bid, or the submitting of bids for the Contract for which this Bid is submitted.

The Undersigned is prepared to submit a Statement of Bidder's Qualifications, a financial statement, and/or any information requested by the City.

However, once work has commenced the project shall be completed without interruption of normal working days unless authorized in writing by the Engineer.

PART IV In regard to non-segregated facilities, the Undersigned certifies:

That he/she does not maintain or provide for any employees any segregated facilities at any of his/her establishments;

That he/she does not permit employees to perform their services at any location, under his/her control, where segregated facilities are maintained;

That he/she will not maintain or provide for employees any segregated facilities at any of his/her establishments, and that he/she will not permit employees to perform their services at any location under his/her control where segregated facilities are maintained.

The Undersigned hereby agrees:

That a breach of this section of the Bidders Certification will be a violation of the Equal Opportunity clause in any contract resulting from acceptance of this Bid.

That he/she will obtain identical certification from proposed subcontractors prior to the award of subcontracts exceeding $10,000 which are not exempt from the provisions of the Equal Opportunity clause (unless already obtained for specific time periods), and that he/she will retain such certifications on file.

[As used in this section of this Bidder Certification, the term "segregated facilities" means any waiting rooms, work areas, restrooms, and washrooms, restaurants and other eating areas, time clocks, locker rooms and other storage or dressing areas, parking lots, drinking fountains, recreation or entertainment areas, transportation and housing facilities provided for employees which are segregated by explicit directive or are in fact segregated on the basis of race, color, religion or national origin, because of habit, local custom, or otherwise.]

NOTE: The penalty for making false statements in offers is prescribed in 18 U.S.C. 1001.

SIGNED: _____ DATED: _____

_____
(Printed name)

_____
(Title)

_____
(Company/Bidder)

_____
(Company/Bidder Street Address)

_____
(Company/Bidder City, State Zip)

1.4 ADDEDUM NO. 1

See Part 7 Appendices: ADDEDUM NO. 1

1.5 Bid Tabulation

City Of Muskegon

WATCH MUSKEGON

Project Engineer: C.W./JB
Project Number: B253
Project description: Jefferson and Western Parking Lot
Date: 3/9/2018

Line Item	Pay Code	Description	Units	Quantity	Unit Price	Total
1	1500001	Mobilization, Max	LSUM	1		$ -
2	2020004	Tree, Rem, 6 inch to 18 inch	Ea	8		$ -
3	2027050	Hedge, Rem	Ft	40		$ -
4	2037050	Dr Structure, Rem, Modified	Ea	4		$ -
5	2040020	Curb and Gutter, Rem	Ft	280		$ -
6	2040035	Guardrail, Rem	Ft	55		$ -
7	2040045	Masonry and Conc Structure, Rem	Cyd	20		$ -
8	2040055	Sidewalk, Rem	Syd	65		$ -
9	2040070	Utility Pole, Rem	Ea	1		$ -
10	2047011	Pavt, Rem, Modified	Syd	2407		$ -
11	2050010	Embankment, CIP	Cyd	80		$ -
12	2050016	Excavation, Earth	Cyd	1703		$ -
13	2080020	Erosion Control, Inlet Protection, Fabric Drop	Ea	6		$ -
14	2090001	Project Cleanup	LSUM	1		$ -
15	3020016	Aggregate Base, 6 inch	Syd	4450		$ -
16	4020600	Sewer, Cl E, 12 inch, Tr Det B	Ft	135		$ -
17	4021204	Sewer Tap, 12 inch	Ea	1		$ -
18	4037050	Catch Basin Specail Detail	Ea	2		$ -
19	4037050	Catch Basin 2 FT ID Special Detail	Ea	3		$ -
20	4037050	Dr Structure Cover, Type B, Modified	Ea	1		$ -
21	4037050	Dr Structure Cover, Type D, Modified	Ea	3		$ -
22	5010033	HMA, 13A	Ton	475		$ -
23	5010034	HMA, 36A	Ton	350		$ -
24	6020054	Conc Pavt, Misc, Nonreinf, 8 inch	Syd	35		$ -
25	8017011	Driveway, Nonreinf Conc, 6 Inch, Modified	Syd	75		$ -
26	8020038	Curb and Gutter, Conc, Det F4	Ft	920		$ -
27	8030044	Sidewalk, Conc, 4 inch	Sft	1970		$ -
28	8030046	Sidewalk, Conc, 6 inch	Sft	500		$ -
29	8037001	Decorative Block Wall Special Detail	Ft	335		$ -
30	8037010	Sidewalk, Conc, 6 Inch, Colored	Sft	120		$ -
31	8037010	Sidewalk, Conc, 6 Inch, Colored with Acidic Stain	Sft	10		$ -
32	8100370	Post, Steel, 2 lb	Ft	36		$ -
33	8100371	Post, Steel, 3 lb	Ft	24		$ -
34	8100404	Sign, Type IIIA	Sft	15		$ -
35	8110231	Pavt Mrkg, Waterborne, 4 inch, White	Ft	2130		$ -
36	8117001	Pavt Mrkg, Waterborne, 4 inch, Blue	Ft	220		$ -
37	8117050	Pavt Mrkg, Waterborne, Handicap, Sym, Blue	Ea	4		$ -

38	8120170	Minor Traf Devices	LSUM	1		$ -
39	8120250	Plastic Drum, High Intensity, Furn	Ea	25		$ -
40	8120251	Plastic Drum, High Intensity, Oper	Ea	25		$ -
41	8120352	Sign, Type B, Temp, Prismatic, Special, Furn	Sft	48		$ -
42	8120353	Sign, Type B, Temp, Prismatic, Special, Oper	Sft	48		$ -
43	8160062	Topsoil Surface, Furn, 4 inch	Syd	100		$ -
44	8167011	Hydroseeding	Syd	100		$ -
45	8267021	Flowable Fill, Non Structural	Cyd	7		$ -

Total: $ -

1.6 BID BOND

KNOW ALL MEN BY THESE PRESENTS, that we the undersigned,

_____as PRINCIPAL, and
(Name of Principal)

_____ as SURETY are held and firmly bound unto
(Name of Surety)
The City of Muskegon, Michigan, in the penal sum of_____

_____dollars, ($_____) lawful money of the United States, for the payment of which sum well and truly to be made, we bind ourselves, our heirs, executors, administrators, successors, and assigns, jointly and severally, firmly by these presents.

THE CONDITION OF THIS OBLIGATION IS SUCH, that whereas the Principal has

submitted the Accompanying Bid, dated_____,20_____,

for_____.

NOW, THEREFORE, if the Principal shall not withdraw said Bid within the period specified for withdrawal; and shall within ten (10) days after the prescribed forms are presented for signature enter into a written Contract with the City of Muskegon in accordance with the Bid as accepted, and give bond with good and sufficient surety or sureties, as may be required for the faithful performance and proper fulfillment of such Contract; or

In the event of the withdrawal of said Bid within the period specified for withdrawal, or the failure to enter into such contract and give such bond within the time specified; and if the Principal shall pay the City of Muskegon the difference between the amount specified in said Bid and the amount for which the City of Muskegon may procure the required work or supplies or both, if the latter be in excess of the former.

THEN the above obligation shall be void and of no effect; otherwise shall remain in full force and virtue

IN WITNESS WHEREOF, the above-bounded parties have executed this instrument

Under their several seals this_____ day of_____, 20_____
the name and corporate seal of each corporate party being hereto affixed and these presents signed by its undersigned representative, pursuant to authority of its governing body.

In presence of

_____ _____(SEAL)
(Individual Principal)

_____
Business Address including Zip Code

_____
Partnership

_____
Business Address including Zip Code Attest:

_____ _____
By:

(SEAL)

_____
Corporate Principal

_____
Business Address including Zip Code Attest:

_____ _____
By:

Affix
Corporate
Seal

Countersigned

By

Attorney-in-fact, State of _____

CERTIFICATE AS TO CORPORATE PRINCIPAL

I, _____, certify that I am the _____, Secretary of the Corporation named as Principal in the within Bond; that

_____, who signed the said Bond on behalf of the

Principal was then _____ of said Corporation; that I know his/her signature, and his/her signature thereto is genuine; and that said bond was duly signed, sealed, and attested to for and in behalf of said Corporation by authority of this governing body.

Affix
Corporate
Seal

By:_____

Title:_____

1.7 NON-COLLUSION AFFIDAVIT OF PRIME BIDDER

State of _____)
) ss.
County of _____)

_____ , being first duly sworn, deposes and says that:

1. He/She is _____
(owner, partner, officer, representative, agent)

of _____ , the Bidder that has submitted the attached Bid to the City of Muskegon;

2. He/She is fully informed respecting the preparation and contents of the attached Bid and of all pertinent circumstances thereto;

3. Such Bid is genuine and is not a collusive or sham Bid;

4. Neither said Bidder nor any of his/her officers, partners, owners, agents, representatives, employees or parties in interest, including this affiant, has in any way colluded, conspired, connived or agreed, directly or indirectly, with any other Bidder, firm or person to submit a collusive or sham Bid in connection with the Contract for which the attached Bid has been submitted, or to refrain from bidding in connection with such Contract; nor has in any manner, directly or indirectly, sought by agreement, collusion, communication or conference with any other Bidder, firm or person to fix the price or prices in the attached Bid or any other bid; nor to fix any overhead, profit or cost element of the Bid price or the bid price of any other bidder; nor to secure through any collusion, conspiracy, connivance or unlawful agreement any advantage against the City of Muskegon or any person interested in the proposed Contract; and

5. The price or prices quoted in the attached Bid are fair and proper, and are not tainted by any collusion, conspiracy, connivance or unlawful agreement on the part of the Bidder or any part of its agents, representatives, owners, employees or parties in interest, including this affiant.

Signed: _____

_____

Printed Name and Title

Subscribed and sworn to before me

This _____ day of _____, 20____

_____

_____
Title

My Commission expires _____

1.8 LIST OF PROPOSED SUBCONTRACTORS

Project Number: B 253

Project Name: Jefferson & Western Parking Lot

To be submitted by each Bidder with Bid Proposal in accordance with Section 1. Before a subcontract is executed by the successful Bidder, the subcontractor must be approved by the City of Muskegon and the required documents executed in accordance with the Contract Documents.

1. NAME OF FIRM _____

   FIRM ADDRESS _____

   _____

2. NAME OF FIRM _____

   FIRM ADDRESS _____

   _____

3. NAME OF FIRM _____

   FIRM ADDRESS _____

   _____

4. NAME OF FIRM _____

   FIRM ADDRESS _____

   _____

5. NAME OF FIRM _____

   FIRM ADDRESS _____

   _____

6. NAME OF FIRM _____

   FIRM ADDRESS _____

   _____

7. NAME OF FIRM _____

   FIRM ADDRESS _____

   _____

1.9 DISADVANTAGED CONTRACTOR AFFIDAVIT

Project Number: B 253

Project Name: Jefferson & Western Parking Lot

Please provide the name(s) of all Disadvantaged subcontractors from whom you solicited bids for this project and additional information below.

Disadvantaged Contractor:	Contact Person:	Contact Method/Date:	Decision (Yes or No):
1._____	_____	_____	_____
2._____	_____	_____	_____
3._____	_____	_____	_____
4._____	_____	_____	_____

Of the Disadvantaged Contractors listed above, please indicate why they will not be used on this project.

Disadvantage Contractor:	Decision/Reason:
1._____	_____
	_____
2._____	_____
	_____
3._____	_____
	_____
4._____	_____
	_____

1.10 STATEMENT OF BIDDER'S QUALIFICATIONS

(To be submitted by the Bidder upon specific request of City of Muskegon unless in connection with Letters of Recommendation in lieu of Performance Bond as provided in Section 1, Paragraph 17(e). The Statement of Bidder's Qualifications as follows must accompany the four Letters.)

1.10.1 SUMMARY OF BIDDER'S INFORMATION TO BE PROVIDED:

Each of the following items must be responded to in writing, and the information provided thereby must be clear and understandable. Upon completion, the Statement must be signed by the Bidder in front of a Notary Public and notarized. The Bidder may supply such additional information as desired after responding to each of these items:

1. NAME OF BIDDER (Company, individual, etc.)

2. PERMANENT MAIN OFFICE ADDRESS OF BUSINESS INCLUDING ZIP CODE.

3. DATE BUSINESS WAS ESTABLISHED.

4. IF A CORPORATION, WHERE WAS IT INCORPORATED?

5. NUMBER OF YEARS ENGAGED IN CONTRACTING BUSINES UNDER PRESENT NAME? FIRM OR TRADE NAME? UNDER A PREVIOUS NAME?

6. SCHEDULE OF OUTSTANDING CONTRACTS, showing amount of each contract and the anticipated completion date of each.

7. GENERAL CHARACTER OF WORK PERFORMED BY YOUR COMPANY.

8. HAS THIS COMPANY EVER FAILED TO COMPLETE ANY WORK AWARDED IT? If so, WHERE AND WHY?

9. HAS THIS COMPANY EVER DEFAULTED ON A CONTRACT? If so, WHERE ANY WHY?

10. LIST THE PROJECTS RECENTLY COMPLETED BY YOUR COMPANY, stating approximate cost of each and the month/year completed. Indicate which, if any, have provided your company with a Letter of Recommendation.

11. INDICATE EXPERIENCE IN CONSTRUCTION WORK SIMILAR TO THIS PROJECT.

12. LIST YOUR MAJOR EQUIPMENT AVAILABLE FOR THIS CONTRACT.

13. INDICATE BACKGROUND AND EXPERIENCE OF THE PRINCIPAL MEMBERS OF YOUR ORGANIZATION, INCLUDING OFFICERS.

14. INDICATE CREDIT AVAILABLE TO YOUR COMPANY.

15. LIST BANK REFERENCES. If a detailed financial statement is available attach it to this statement.

16. ARE YOU WILLING TO COMPLETE A DETAILED FINANCIAL STATEMENT AND FURNISH ANY OTHER INFORMATION REQUIRED AND REQUESTED BY THE CITY OF MUSKEGON?

17. INCLUDE THE FOLLOWING STATEMENT: "The undersigned hereby authorizes and requests any person, firm or corporation to furnish any information requested by the City of Muskegon in verification of the recitals comprising this Statement of Bidder's Qualifications."

18. INCLUDE THE FOLLOWING AT THE END OF YOUR STATEMENT:

Dated this_____day of_____, 20____.

COMPANY/BIDDER NAME

SIGNATURE

PRINTED NAME AND TITLE OF PERSON SIGNING

19. INCLUDE OFFICIAL NAME AND DATA FOR NOTARY PUBLIC TO NOTARIZE DOCUMENT.

1.11 DBE/MBE/WBE PROCUREMENT POLICY

1.11.1 POLICY STATEMENT: 2014-31 (e)

It is the policy of the City of Muskegon to assure that small disadvantaged business enterprises (DBE), minority business enterprises (MBE), and woman-owned business enterprises (WBE) are given the opportunity to participate in contracting and procurement for supplies, construction, equipment and services under federal contracts and collaborations.

This policy applies to all contracts/procurement for supplies, construction equipment and services under any federally contracted grant or cooperative agreement. The purpose is to ensure nondiscrimination in the solicitation, either by competitive bidding or negotiation, and award and administration of federally assisted contracts and collaborations.

Entities contracting or sub-contracting with the City of Muskegon shall comply with regulations relative to nondiscrimination in Federally-assisted programs as amended from time to time (hereinafter referred to as the Regulations), which are herein incorporated by reference and made a part of this contract.

During the performance of any contract, the contractor, for itself, its assignees and successors in interest (hereinafter referred to as the "contractor") agrees, as follows:

1.11.2 STATEMENT OF NON-DISCRIMINATION

The contractor, with regard to the work performed by it during the contract, shall not discriminate on the grounds of race, color, sex, or national origin in the selection, retention, and treatment of subcontractors, including procurements of supplies, construction, equipment and services.

1.11.3 FAIR SHARE GOALS

All methods of solicitation shall include the following language to meet "Good Faith Effort" requirements as stated in the general provisions of *EPA's 40 CFR 33* of the Federal Regulation:

> *This contract is subject to the Environmental Protection Agency's (EPA) "fair share policy," which includes EPA-approved "fair share goals" for Disadvantaged Business Enterprise (DBE), Minority Business Enterprise (MBE) and Woman Business Enterprise (WBE) firms in the Construction, Supplies, Equipment, and Services procurement categories. EPA's policy requires that applicants and prime contractors make a good faith effort to award a fair share of contracts, subcontracts and procurements to Minority Business Enterprise and Women-Owned Business Enterprise firms. Although EPA's policy does not mandate that the fair share goals be achieved, it does require applicants and prime contractors to demonstrate use of the six affirmative steps, and adhere to the current fair share goals for the State of Michigan.*

1.11.4 GOOD FAITH EFFORTS

(1) The City of Muskegon shall ensure DBE/MBE/WBEs are made aware of contracting opportunities to the fullest extent practicable through outreach and recruitment activities by maintaining a solicitation list of DBE/MBE/WBE businesses and notifying them whenever they are potential sources.

(a) Maintain and update a listing of qualified DBE/MBE/WBEs that can be solicited for construction, equipment, services and/or supplies on the City of Muskegon website.

(b) Provide listings to all interested parties who request copies of the bidding or proposing documents.

(c) Contact appropriate sources within our geographic area to identify DBE/MBE/WBEs for placement on our business listings.

(d) Utilize other DBE/MBE/WBE listings such as those of the States Minority Business Office, the Small Business Administration, Minority Business Development Agency (MBDA) of the Department of Commerce, EPA OSDBU, DOJ, HUD, DOT and Department of Homeland Security.

(e) Solicitation lists are available for review at all times via the city website.

(2) The City of Muskegon shall make information of forthcoming opportunities available to DBE/MBE/WBEs and arrange time for viewing of contracts and establish delivery schedules, where requirements permit, in a way that encourages and facilitates participation by DBEs, MBEs, and WBEs in the competitive process. This includes, whenever possible, posting solicitations for bids or proposals for a minimum of 30 calendar days(federal projects) and 10 calendar days(local projects), before the bid or proposal closing date.

(a) Develop realistic delivery schedules which may provide for greater DBE/MBE/WBE participation.

(b) Advertise through the minority media in order to facilitate DBE/MBE/WBE utilization. Such advertisements may include, but are not limited to, contracting and subcontracting opportunities, hiring and employment, or any other matter related to the project.

(c) Advertise in general circulation publications, trade publications, State agency publications and minority and women's business focused media concerning contracting opportunities on our projects. Maintain a list of minority and/or women's business-focused publications that may be utilized to solicit DBE/MBE/WBEs.

(3) The City of Muskegon will consider in the contracting process whether firms competing for large contracts could subcontract with DBE/MBE/WBEs. The City of Muskegon will divide total requirements when economically feasible and practical into smaller tasks or quantities in order to increase opportunities for participation by DBE/MBE/WBEs in the competitive process.

(a) Perform an analysis to identify portions of work that can be divided and performed by qualified DBE/MBE/WBEs.

(b) Scrutinize the elements of the total project to develop economical units of work that are within the bonding range of DBE/MBE/WBEs.

(c) Conduct meetings, conferences, and follow-ups with DBE/MBE/WBE associations and minority media to inform these groups of opportunities to provide construction, equipment, services and supplies.

(4) The City of Muskegon will consider and encourage contracting with a consortium of DBE/MBE/WBEs when a contract is too large for one of these firms to handle individually.

(a) Notify DBE/MBE/WBEs of future procurement opportunities so they may establish bidding solicitations and procurement plans.

(b) Provide DBE/MBE/WBEs trade organizations with succinct summaries of solicitations.

(c) Provide interested DBE/MBE/WBEs with adequate information about plans, specifications, timing and other requirements of the proposed projects.

(5) Use the services and assistance of the Small Business Administration (SBA) and the Minority Business Development Agency (MBDA).

(a) Use the services of outreach programs sponsored by the MBDA and/or the SBA to recruit bona fide firms for placement on DBE/MBE/WBE bidders lists to assist these firms in the development of bid packaging.

(b) Seek out Minority Business Development Centers (MBDCs) to assist recipients and prime contractors in identifying DBE/MBE/WBEs for potential work opportunities on projects

(6) If the prime contractor awards subcontractors, the prime contractor is required to take the steps in subparagraphs (1)-(5) of this section.

1.11.5 DOCUMENTATION/REPORTING

The contractor shall provide all information and reports required by the Regulations, or directives issues pursuant thereto, and shall permit access to its books, records, accounts, other sources of information, and its facilities as may be determined by the appropriate federal agency to be pertinent to ascertain compliance with such Regulations or directives. Where any information required of a contractor is in the exclusive possession of another who fails or refuses to furnish this information, the contractor shall so certify to the appropriate State or Federal Agency, as appropriate, and shall set forth what efforts it has made to obtain the information.

1.11.6 NON – COMPLIANCE

Contractors, sub-contractors, and other associated entities failing to comply with the federal regulations legally required under contracts associated with Environmental Protection Agency (EPA), Housing and Urban Development (HUD), Department of Justice (DOJ), Department Of Transportation (DOT), or Department of Homeland Security (DHS) that have been granted to the City of Muskegon, may result in delayed closings, withholding the release of funds, or commitment cancellation.

PART 2 - AGREEMENT

2.0 AGREEMENT

THIS AGREEMENT, made this ___th* day of _____, 20__ * by the City of Muskegon

And between _____

{a corporation organized and existing under the laws of the state of MICHIGAN];

or [a partnership consisting of_____];

or {an individual trading as_____];

Hereinafter called the "Contractor", and the CITY OF MUSKEGON, MICHIGAN:

WITNESSETH, that the Contractor and the City of Muskegon, for the consideration stated herein, mutually agree as follows:

ARTICLE 1. Statement of Work. The Contractor shall furnish all supervision, technical personnel, labor, materials, machinery, tools, equipment, and services, including utility and transportation services, and perform and complete all work required for the construction of the improvements embraced in this Contract, NAMELY:

_____

_____

_____

and required supplemental work for the completion of this Project, all in strict accordance with the Contract, including all Addenda.

ARTICLE 2. The Contract Price. The City of Muskegon will pay the Contractor for the performance of this Contract and the completion of the work covered therein an amount in current funds not to exceed

_____

Article 3. Contract. The executed contract shall consist of, but not be limited to, the following:

Invitation for Bids
Part 1- Bids
Section 1 – Instruction to Bidders
Section 2 – Bid Proposal
Part 2 – Agreement
Part 3 – General Specifications
Section 1 – Project Performance
Section 2 – Affirmative Action
Section 3 – Labor Standards/EEOC/Anti-Kickback Act
Part 4 – Engineering Specifications
Part 5 – Project Special Specifications
Part 6 – MDOT Specifications
Part 7 – Appendices

This Agreement, together with other documents enumerated in this Article 3, which said other documents are as fully part of the Contract as if attached hereto or repeated herein, form the Contract between the parties hereto.

In the event any provision in any component part of this Contract conflicts with any provision of any other component part, the Contractor shall contact the City immediately in writing for a determination, interpretation and/or clarification of conflicting parts and priority of same. Said determination from the City shall be in writing and shall become an Addendum to this Contract

*Date contract awarded by the City Commission

IN WITNESS WHEREOF, the parties hereto have caused this AGREEMENT to be executed in

5 original counterparts on the day and year first written above.

ATTEST: CONTRACTOR

_____ by _____

_____
Printed Name and Title

ATTEST: CITY OF MUSKEGON

_____ _____
Mayor

_____
City Clerk

(SEAL)

CERTIFICATION (if applicable)

I, _____, certify that I am the _____ of the Corporation named as the Contractor herein;

That _____, who signed this Agreement on behalf of the

Contractor, was then _____ of said Corporation;

That said Agreement was duly signed for and in behalf of said Corporation by authority of its governing body, and is within the scope of its corporate powers.

SIGNED:

_____

(CORPORATE SEAL) _____
printed name and title

2.1 PERFORMANCE BOND

KNOW ALL MEN BY THESE PRESENTS, that we, _____

_____,_____as
Principal, and
_____,
as Surety, are held and firmly bound unto the City of Muskegon, its certain attorney, successors or assigns (hereinafter called the Obligee), in the full and just sum of _____
_____dollars ($_____) lawful money of the United States, for the payment of which sum well and truly to be made, we bind ourselves, our heirs, administrators, executors, successors and assigns, jointly and severally, firmly by these presents:

WHEREAS, said Principal has entered into a certain contract with Obligee,

dated _____, 20_____*, (hereinafter called the Contract) for: _____
_____
_____
and the specifications for said work shall be deemed a part hereof as fully
as if set out herein:
NOW, THEREFORE, THE CONDITIONS OF THIS OBLIGATION ARE SUCH THAT:

(a) If the Principal shall faithfully perform the Contract on his/her part, as of the time and in the manner therein provided; shall satisfy all claims and demands incurred in or for the same, or growing out of the same, or for injury or damages to persons or property in the performance thereof; shall fully indemnify and save harmless said Obligee from any and all cost and damage which the Obligee may suffer by reason of the Principal's failure to do so; and shall fully reimburse and par the Obligee any and all outlay and expense which it may occur by reason of such default; and

(b) If, after completion and acceptance of the work by the Obligee, the Principal shall promptly remedy any defects in the work due to faulty materials or workmanship which shall appear within the period of one year from the date of completion and final acceptance of the work, and pay for any damage to said Obligee, to the State of Michigan, or to any municipal subdivision or local authority thereof to which the rights and privileges of said Obligee have passed or been assigned, then this obligation shall be null and void; otherwise it shall remain in full force and virtue.

The said Surety, for value received, hereby stipulates and agrees that no change, extension of time, alteration or addition to the terms of the Contract to the work to be performed thereunder, or to the specifications accompanying the same, shall in any wise affect its obligations on this Bond; and it does thereby waive notice of any such change, extension of time, alteration or addition to the terms of the Contract, or to the work or specifications.

It is hereby further stipulated and agreed that, if the Principal is a non-Michigan Corporation, neither the Principal nor the Surety shall be discharged from liability on this Bond, nor the bond surrendered, until such Principal files with the Obligee a certificate from the Michigan Department of Revenue evidencing the payment in full of all taxes, penalties and/or interest, and a certificate from the Unemployment Compensation Commission evidencing the payment of all unemployment compensation contributions, penalties and/or interest, due the State of Michigan from said Principal, or any non-Michigan corporation, subcontractor thereunder, or for which liability has accrued but the time for payment has not arrived.

SIGNED, SEALED AND DELIVERED IN _____5_____ORIGINAL COUNTERPARTS

THIS _____DAY OF _____, 20 ___.

Individual Principals Sign Here: In the Presence of:

_____ (SEAL) _____

_____ (SEAL) _____

_____ (SEAL)

Corporate Principals Sign Here: Attest:

_____ _____

_____
(Printed Name and Title)
_____

Surety Sign Here: Attest:

_____ _____

_____
(Printed Name and Title)

The rate of premium charge is $_____ per thousand.

The total amount of premium charged is $_____
(to be filled in by the Corporate Surety).

2.2 LABOR & MATERIALMAN'S BOND

KNOW ALL MEN BY THESE PRESENTS, that we, _____
_____ ,
as Principal, and
_____,
as Surety, are held and firmly bound unto the City of Muskegon, its certain attorney, successors or assigns (hereinafter called the Obligee) in the penal sum of _____
_____dollars ($_____) lawful money of the United States, for the payment of which sum well and truly to be made, we bind ourselves, our heirs, personal representatives, successors and assigns, jointly and severally, firmly by these presents:

WHEREAS, said Principal has entered into a certain contract with said Obligee, dated _____
_____, 20____, (hereinafter called the Contract) for: _____
_____
_____and the specifications for said work shall be deemed a part hereof as fully as if set out herein:

NOW, THEREFORE, THE CONDITION OF THIS OBLIGATION IS SUCH that, if said Principal, all subcontractors to whom any portion of the work provided for in said Contract is sublet, and all assignees of said Principal and of such subcontractors, shall promptly make payment for all material furnished, labor supplied or performed, rental for equipment employed and services rendered by public utilities in or in connection with the prosecution of the work, whether or not said material, labor, equipment or services entered into become component parts of the work or improvement contemplated in said Contract, in any amendment, extension of, or addition to said Contract, then the above obligation shall be void; otherwise, it shall remain in full force and effect; PROVIDED, HOWEVER, that this Bond is subject to the following conditions and limitations:

(a) All persons who have performed labor, rendered services or furnished materials or equipment, shall have a direct right of action against the Principal and Surety on this Bond, which right of action shall be asserted in proceedings instituted in the State in which such labor was performed, services rendered or materials furnished (or where labor has been performed, services rendered or materials furnished under said Contract in more than one state, then in any such states). Insofar as permitted by the laws of such State, such right of action shall be asserted in a proceeding instituted in the name of the Obligee to the use and benefit of the persons instituting such action and any or all other persons having claims hereunder; and any other person having a claim hereunder shall have the right to be made a party to such proceedings, but not later than one year after the complete performance of said Contract and final settlement thereof, and to have such claim adjudicated in such action and judgment rendered thereon; PROVIDED HOWEVER, that the Obligee shall not be liable for the payment of any costs or expenses of any such suit.

(b) The Surety shall not be liable hereunder for any damages or compensation recoverable under any workmen's compensation or employer's liability statute.

(c) In no event shall the Surety be liable for a greater sum than the penalty of this Bond, or subject to any suit, action or proceeding thereon, that is instituted later than one year after the complete performance of said Contract and final settlement thereof.

(d) As used herein: The term "Person" refers to any individual, firm or corporation which has furnished materials, equipment or public utility services to be used on or incorporated in the work, or the prosecution thereof, provided for in said Contract or any amendment, extension of, or addition to said Contract; and/or to any person engaged in the prosecution of the work provided for in said Contract or any, extensions of, or addition to said Contract, who is an agent, servant or employee of the Principal or of any subcontractor, or any assignee of said Principal or any subcontractor; and also anyone so engaged who performs the work of a laborer or mechanic, regardless of any contractual relationship between the Principal or any subcontractor, or any

assignee of said Principal or subcontractor and such laborer or mechanic; BUT shall not include office employees not regularly stationed at the site of the work.

(e) It is hereby further stipulated and agreed that, if the Principal is a non-Michigan corporation, neither the Principal nor the Surety shall be discharged from liability on this Bond, nor the Bond surrendered, until such Principal files with the Obligee a certificate from the Michigan Department of Revenue evidencing the payment in full of all taxes, penalties and/or interest due the State of Michigan from the Principal, or any non-Michigan corporation, subcontractor thereunder, or for which liability has accrued but the time for payment has not arrived.

The Surety, for value received, hereby stipulates and agrees that no change, extension of time, alteration or addition to the terms of the Contract, to the work to be performed thereunder, or to the specifications accompanying the same, shall in any wise affect the obligations of this Bond, and it does hereby waive notice of any such change, extension of time, alteration or addition to the terms of the Contract, the work thereunder, or the specifications.

SIGNED, SEALED AND DELIVERED IN_____ORIGINAL COUNTERPARTS

THIS _____DAY OF_____, 20_____.

In the Presence of:

_____

_____

_____

Individual Principals Sign Here:

_____

_____
(Printed Name and Address)

_____

_____
(Printed Name and Address)

_____

_____
(Printed Name and Address)

ATTEST:

_____

_____
(Printed Name)

Corporate Principal Sign Here:

_____

_____
(Printed Name and Title)

_____

(SEAL)

Surety Sign Here:

_____

_____
(Printed Name)

_____
(Printed Name and Title)

DIRECTIONS FOR PREPARATION
2.3 PERFORMANCE, LABOR & MATERIALMEN'S BONDS

1. Individual sureties, partnerships, or corporations not in the surety business will not be acceptable.

2. The name of the Principal shall be shown exactly as it appears in the Contract.

3. The penal sum shall not be less than that required by the Specifications.

4. If the Principals are partners, or joint ventures, each member shall execute the bond as an individual, with his/her place of residence shown.

5. If the Principal is a corporation, the bond shall be executed under its corporate seal. If the corporation has no corporate seal, the fact shall be stated, in which case a scroll or adhesive seal shall be affixed following the corporate name.

6. The official character and authority of the person(s) executing the bond for the Principal, if a corporation, shall be certified by the Secretary or Assistant Secretary thereof under the corporate seal; OR
   There may be attached copies of such corporation records as will evidence the official character and authority of the officer signing, duly certified by the Secretary or Assistant Secretary of the corporation, under the corporate seal, to be true copies.

7. The current Power-of-Attorney of the person signing for the surety company must be attached to the bond.

8. The date of the bond MUST NOT BE PRIOR TO THE DATE OF THE CONTRACT.

9. The following information must be placed on the bond by the surety company:

   a. The rate of premium in dollars per thousand; and
   b. The total dollar amount of the premium charged.

10. The signature of a witness shall appear in the appropriate place, attesting to the signature of each party to the bond.

11. Type or print the name underneath EACH SIGNATURE appearing on the bond.

12. An executed copy of the bond must be attached to each copy of the Contract (original counterpart) intended for signing.

2.4 LETTERS OF RECOMMENDATION IN LIEU OF PERFORMANCE BOND

In accordance with Section 1, four letters of sincere recommendation may be presented to the City Manager in lieu of a performance bond when this Contract is under the amount of $50,000 and the successful Bidder cannot produce the appropriate performance bond.

To use letters of recommendation for this purpose, your intention to do so must be disclosed as part of your bid, so that a decision on acceptability can be made prior to the contract award.

The four letters are to be presented prior to the execution of the Contract Agreement and must be accompanied by the Statement of Bidder's Qualifications as outlined (Part 1, Section 2, Bid Proposal). Each of the four letters should contain no less than the following information:

THE LETTER OF RECOMMENDATION PACKAGE IS SUBJECT TO CITY MANAGER AND/OR CITY COMMISSION APPROVAL PRIOR TO LETTING THE BID OR EXECUTING THE AGREEMENT.

SUMMARY OF INFORMATION TO BE INCLUDED IN EACH LETTER OF RECOMMENDATION

1. On letterhead of the recommending company, including name, address and phone number of the recommending company.

2. Include reference to the name of the company being recommended.

3. Include a brief description of the type of each of the projects the recommended company performed, the total dollars contracted for each, and the date of construction start and completion under each contract.

4. Include a statement indicating how the company being recommended performed the work involved under the contracts, whether the recommended company accomplished the work satisfactorily and within the appropriate time limits of the contracts.

5. Indicate if there was any default on the part of or litigation as a result of the recommended company.

6. Indicate if, to the best of knowledge, all subcontractors and/or suppliers of labor or materials on each project were properly compensated by the company being recommended.

7. Include a statement the same as, or similar to the following:

   "I, on behalf of my organization (or company by name) recommend this company (or the name of the company being recommended) as responsible and competent, and I believe they can capably perform construction work similar to that described in this letter in a timely and satisfactory manner."

2.5 NON-COLLUSION AFFIDAVIT OF SUBCONTRACTOR

State of _____)
) ss.
County of _____)

_____, being first duly sworn, deposes and says that:

1. He/She is _____
(owner, partner, officer, representative or agent)

of _____, hereinafter referred to as the "Subcontractor";

2. He/She is fully informed respecting the preparation and contents of the subcontractor's proposal submitted by the subcontractor to

_____, the Contractor for certain work in connection with the City of Muskegon, Michigan, City

Pertaining to Project Number & Name: _____

3. Such subcontractor's proposal is genuine and is not a collusive or sham proposal;

4. Neither the subcontractor nor any of its officers, partners, owners, agents, representatives, employees or parties in interest. including this affiant, has in any way colluded, conspired, connived or agreed, directly or indirectly, with any other Bidder, firm or person to submit a collusive or sham proposal in connection with such Contract or to refrain from submitting a proposal in connection with such Contract; or has in any manner, directly or indirectly, sought by unlawful agreement or connivance with any bidder, firm or person to fix the price or prices in said subcontractor's proposal or to secure through collusion, conspiracy, connivance or unlawful agreement any advantage against the City of Muskegon or any person interested in the proposed Contract; and

5. The price or prices quoted in the subcontractor's proposal are fair and proper, and are not tainted by any collusion, conspiracy, connivance or unlawful agreement on the part of the subcontractor or any of its agents, representatives, owners, employees or parties of interest, including this affiant.

SIGNED: _____

_____
(Printed Name and Title)

Subscribed and sworn to before me

This _____day of _____, 20_____

by _____

_____
Name and Title
My Commission expires _____, 20_____

PART 3 – GENERAL SPECIFICATIONS

SECTION 1 – PROJECT PERFORMANCE

3.0.1 ASSIGNMENT OR NOVATION

a. The Contractor shall not assign or transfer, whether by an assignment or novation, any of its rights, duties, benefits, obligations, liabilities or responsibilities under this Contract without the written consent of the City of Muskegon; provided, however, that assignments to banks, trust companies or other financial institutions may be made without said consent.
b. No assignment or novation of this Contract shall be valid unless it expressly provides that the assignment of any of the Contractor's rights or benefits under the Contract is subject to a prior lien for labor performed, services rendered, and materials, tools and equipment supplied for the performance of the work under this Contract in favor of all persons, firms or corporations rendering such labor or services, or supplying such materials, tools or equipment.

3.0.2 CONFLICT OF INTEREST

a. No official of the City of Muskegon who is authorized in such capacity and on behalf of the City to negotiate, make, accept or approve, or to take part in negotiating, making, accepting or approving, any engineering, inspection, construction or material supply contract, or any subcontract, in connection with the construction of this Project shall become directly or indirectly interested personally in this Contract or in any part hereof.
b. No officer, employee, architect, attorney, engineer or inspector of or for the City who is authorized in such capacity, and on behalf of the City, to exercise any legislative, executive, supervisory or other similar function in connection with the construction of this Project, shall become directly or indirectly interested personally in this Contract or in any part hereof, any material supply contract, any subcontract, any insurance contract, or any other contract pertaining to this Project.

3.0.3 CITY'S AUTHORITY

a. The City of Muskegon shall designate and identify its Authorized Representative(s) and Inspectors.
b. The Authorized Representative will be responsible for the execution of the work under this Contract. The Authorized Representative will determine the amount, quality, acceptability of materials, and fitness of the work to be paid for under this Contract. That Representative will decide all questions which may arise in relation to said work and the construction thereof. The City's estimates and decisions shall be final and conclusive, except as herein otherwise expressly provided.
c. Inspectors will work under the direct supervision of the Authorized Representative. Inspectors will not be authorized to revoke, alter, enlarge or relax any of these specifications nor to change the plans in any particular. The Inspector on the work will inform the Authorized Representative as to the progress of the work, the manner in which it is being done, and the quality of the materials being used. He/She will also call to the attention of the Contractor any failure to follow the plans and specifications that may be observed. He/She shall have the authority to prevent any material from being used, and to stop any work from being done, which he/she believes does not conform to the plans and specifications, until the Authorized Representative has an opportunity to inspect the material or work. In no instance shall any action or omission on the part of the Inspector relieve the Contractor of the responsibility of completing the work in accordance with the plans and specifications.
d. In case any question shall arise between the parties hereto relative to said Contract, the determination or decision of the City shall be a condition precedent to the right of the Contractor

to receive any money or payment for work under this Contract affected in any manner, or to any extent, by such question.

e. The City shall decide the meaning and intent of any portion of this Contract or any specifications therein where the same may be found obscure or in dispute. Any differences or conflicts in regard to the work which may arise between the Contractor under this Contract and other contractors performing work for the City shall be adjusted and determined by the City.

3.0.4 OTHER CONTRACTS

The City may award, or may have awarded, other contracts for additional work in the vicinity of this Project; and the Contractor shall cooperate fully with such other contractors by scheduling his/her own work with that to be performed under other contracts as may be directed by the City. The Contractor shall not commit or permit any act which will interfere with the performance of work by any other contractor as scheduled.

3.0.5 TERMINATION OF CONTRACT

a. If the Contractor refuses or fails to prosecute the work with such diligence as will ensure its completion within the time specified, or as amended, in these Contract Documents, the City may, by written notice, terminate the Contractor's right to proceed with the work.
b. Upon such termination, the City of Muskegon may take over the work and prosecute same to completion, by contract or otherwise, and may take possession of, and utilize in completing the work, such materials, tools, equipment and plant as may be on the site of the work and necessary to the completion thereof.
c. The Contractor and the sureties to the Contract shall be liable to the City for any additional cost incurred by the City in its completion of the work, and shall further be liable for the liquidated damages for any delay in completion of work as provided by this Contract.

3.0.6 REVIEW BY AUTHORIZED REPRESENTATIVES

The City of Muskegon, its authorized representative(s) and/or agents shall at all times have access to, and be permitted to observe and review, all work, materials, equipment, payrolls, personnel records, employment conditions, material invoices, and other relevant data and records pertaining to this Contract, however, that all instructions and approval with respect to the work will be given to the Contractor by the City of Muskegon through its Authorized Representative.

3.0.7 GENERAL GUARANTY

a. Final acceptance of the work will be acknowledged in writing to the Contractor by the City of Muskegon. Neither the final certificate of payment, any provision in the Contract, nor partial or entire use of the improvements embraced in this Contract by the City or the public shall constitute an acceptance of work not done in accordance with the Contract; nor shall such certificate, provision or use relieve the Contractor of liability in respect to any express warranties or responsibilities for faulty materials or workmanship.
b. The period of guarantee shall not begin until the date of final written acceptance by the City of all work required. The Contractor shall promptly remedy any defects in the work and pay for the damage to other work resulting therefrom which shall appear within a period of twelve (12) months from the date of final acceptance of the work.

3.0.8 WARRANTY OF TITLE

a. No material, supplies or equipment for the work shall be purchased subject to any chattel mortgage or under conditional sale or other agreement by which an interest therein, or in any part thereof, is retained by the seller or supplier.
b. The Contractor shall warrant good title to all materials, supplies and equipment installed or incorporated in the work and, upon completion of all work, shall deliver the same, together with all improvements and appurtenances constructed or placed thereon by him/her, to the City of Muskegon free from any claims, liens or charges.
c. Neither the Contractor nor any person, firm or corporation furnishing any material and/or labor for any work covered by this Contract shall have any right to a lien upon any improvement or appurtenance thereon.
d. Nothing contained in this paragraph, however, shall impair:
    i. The right of persons furnishing materials or labor to recover funds owed them under any bond given by the Contractor for their protection;
    ii. Any rights under any law permitting such persons to look to funds due the Contractor yet in the hands of the City.
e. The provisions of this Subsection 5 shall be inserted in all Subcontracts and material contracts; and notice of its provisions shall be given to all persons furnishing materials for the Project when no formal contract is entered into for such materials.

3.0.9 PATENTS

The Contractor shall hold and save the City of Muskegon, its officers and employees, harmless from liability of any nature or kind, including costs and expenses, for or on account of any patented or unpatented invention, process article, or appliance manufactured or used in the performance of the Contract, including its use by the City of Muskegon.

3.0.10 PAYROLLS AND BASIC RECORDS

a. The Contractor will submit weekly a copy of all payrolls, basic records relating thereto, and completed forms as requested, to the City's Affirmative Action Department accompanied by a "Weekly Statement of Compliance". The prime Contractor shall be responsible for the submission of copies of payrolls of all Subcontractors. *
b. The Contractor shall submit to the City such schedule of quantities and costs, progress schedules, payrolls, reports, estimates, records and other data as the City may request from time to time concerning the work performed under this Contract.
c. The Contractor shall withhold Muskegon City Income Taxes from each and every employee who is subject to same, and shall pay Contractor's Income Tax due, if any. Contractor shall further require the same of each Subcontractor, consultant or other pay with whom the contractor works or from whom contractor obtains goods or services for the project. Payroll submissions required by this agreement shall include full information showing said withholding. The City may withhold payments otherwise due to the contractor to assure compliance with this agreement or cure noncompliance.

3.0.11 SIGNS AS REQUIRED

a. The signs that may be required for this project by the Department of HUD, the National Historic Preservation organizations, or other pertinent funding agencies which may require significant posting on the job site, will be provided and erected by the Contractor as incidental to the Contract.
b. The Contractor shall maintain these signs in good condition throughout the life of this contract.

3.0.12 NATIONAL HISTORIC PRESERVATION ACT OF 1966

The Contractor agrees to contribute to the preservation and enhancement of structures and objects of historical, architectural or archaeological significance when such items are found and/or unearthed during the course of the project, and to consult with the State Historic Preservation Officer for recovery of the items: [Reference: National Historic Preservation Act of 1966 (80 Stat 915, 16 USC 470) and Executive Order No. 11593 of May 31, 1971] AND to assure Subcontractor's compliance as well.

3.0.13 CLEAN AIR ACT

The Contractor shall comply and shall require each of its Subcontractors employed in the completion of this project to comply with all applicable provisions of the Clean Air Act as amended by Public Law 91-604.*

3.0.14 SOIL EROSION AND SEDIMENT CONTROL ACTS

a. Public Acts 346 and 347 as amended shall be observed and enforced while working under these documents. Necessary permits for both Acts shall be obtained by the City of Muskegon. Enforcement for Act 346 shall be by the Michigan Department of Natural Resources, and the enforcing agent for Act 347 shall be the City of Muskegon.
b. The Contractor shall conduct his/her work in such a manner that soil, fuels, oil, bituminous materials, chemicals, sanitary sewage and other harmful materials resulting from the execution of this project are confined within project limits and prevented from entering watercourses, rivers, lakes or reservoirs. All applicable regulations of fish and wildlife agencies and statutes relating to the prevention and abatement of pollution shall be complied with during the performance of this contract. Operations shall be conducted in such a manner as to reduce erosion to the practicable minimum to prevent damaging sedimentation of watercourses, streams or lakes.*
c. The Contractor shall be responsible for utilizing various measures of control in his/her own work and that of Subcontractors to prevent erosion and sediment damage. When applicable, these measures and requirements will be identified and provided on the plans or in the Special Specifications. They are, however, not to be considered all-inclusive, as additional protective measures may be required as the work progresses. No payment will be allowed for this work.

3.0.15 SOIL REMOVAL AND DUMPING ORDINANCE

Under City ordinance, a permit must be obtained from, and a $150 fee paid to, the City of Muskegon Building Inspection Department IF excavated or excess soil materials become the property of the Contractor AND those materials are to be deposited as fill within the corporate limits of the City of Muskegon; OTHERWISE, no permit will be required of the Contractor while working on the Project covered by this Contract.

3.0.16 PERMITS AND CODES

a. The Contractor shall give all notices required by and comply with all applicable laws, ordinances and codes of the local government. All construction work and/or utility installations shall comply with all applicable ordinances and codes including all written waivers. Before installing any work, the Contractor shall examine the drawings and the Specifications for compliance with applicable ordinances and codes, and shall immediately report any discrepancy to the City.
b. Where the requirements of the drawings and Specifications fail to comply with such applicable ordinances and codes, the City will adjust the Contract by Change Order to conform to such ordinances or codes (unless waivers in writing covering the difference have been granted by the

governing body or department) and make appropriate adjustment in the Contract Price or stipulated Unit Prices.

c. Should the Contractor fail to observe the foregoing provisions and proceed with the construction and/or install any utility at variance with any applicable ordinance or code, including any written waivers (notwithstanding the fact that such installation is in compliance with drawings, Technical or Special Specifications), the Contractor shall remove such work without cost to the City, but a Change Order may be issued to cover only the excess cost the Contractor would have been entitled to receive if the change had been made before he/she commenced work on the items involved.
d. The Contractor shall at his/her own expense secure and pay for all necessary permits to execute the work from each involved governmental unit, whether it be the City of Muskegon, townships, County or State of Michigan. In some cases, certain permits will be obtained by the owner and will be so identified within the Special Specifications. All other permits are the responsibility of the Contractor.
e. The Contractor shall comply with applicable local and state laws and ordinances governing the disposal of surplus excavation materials, debris and rubbish on or off the Project Site and commit to trespass on any public or private property in any operation due to or connected with the improvements embraced in this Contract.

3.0.17 TRAFFIC CONTROL

The Contractor shall at all time so conduct his/her work as to ensure the least possible obstruction to traffic. The safety and convenience of the general public and the residents in or adjacent to the Project Site and the protection of persons and property shall be provided for by the Contractor. The Contractor shall provide and maintain adequate barricades, signs, lights and flags to warn and guide the public, and shall provide flagmen and watchmen when needed or when so ordered by the City in full accordance with the MICHIGAN MANUAL OF UNIFORM TRAFFIC ONTROL DEVICES, published and revised from time to time by the Michigan Department of Transportation. The Contractor shall be responsible for compliance with this Item by all Subcontractors as well.*

3.0.18 REQUIRED PROVISIONS DEEMED INSERTED

Each and every provision of law and clause required by law to be inserted in this Contract shall be deemed to be inserted herein, and the Contract shall be read and enforced as though it were included herein; and, if through error or otherwise, any such provision is not inserted, or is incorrectly inserted, then upon the application of either party to this Contract, the Contract shall forthwith be physically amended to make such insertion or correction. This clause shall be included in all Subcontracts.*

3.0.19 COMMUNICATIONS

a. All notices, demands, requests, instructions, approvals, proposals and claims must be in writing.
b. Any notice to or demand upon the Contractor from the City relative to any part of this Contract shall be sufficiently considered given, and the service thereof completed, when said notice is posted, by certified or registered mail, to the Contractor at his/her last given address; or when said notice is delivered in person to the Contractor or authorized representative on the Project Site, at the office of the Contractor, or to any telegraph company for transmission with charges prepaid, in each case addressed to such office.
c. All papers required to be delivered to the City of Muskegon shall be delivered to the Muskegon City Hall, to the attention of the Authorized Representative on this Project, and any notice to or demand upon the City shall be sufficiently given if so delivered, or if posted, by certified or registered mail, to 933 Terrace Street, Muskegon, Michigan 49443, or to any telegraph company

for transmission with charges prepaid, in each case to the same address. Any such notice shall be deemed to have been given as of the time of the actual delivery or at the time of actual receipt, as the case may be.

3.0.20 REQUEST FOR SUPPLEMENTARY INFORMATION

It shall be the responsibility of the Contractor to make timely requests of the City for any additional information not already in his/her possession which should be furnished by the City under the terms of this Contract, and which he/she will require in the planning and execution of the work. Such requests may be submitted from time to time as the need arises, but each shall be filed in ample time to permit appropriate action to be taken by all parties involved so as to avoid delay. Each request shall be in writing, listing the various items and the latest date by which each will be required by the Contractor. The first list shall be submitted within two (2) weeks after the Contract award, and shall be as complete as possible at that time. The Contractor shall, upon request, furnish promptly any assistance and information the City may require in responding to these requests. The Contractor shall be fully responsible for any delay in his/her work or to others arising from his/her failure to comply fully with the provision of this Article.

3.0.21 PROGRESS SCHEDULE AND NOTIFICATION REQUIREMENTS

a. Immediately after execution of the Agreement, the Contractor shall submit for approval a carefully prepared Progress Schedule showing the proposed dates of starting and completing each of the various sections of work. The work which the Contractor is required to perform under this Contract shall commence at the time stipulated by the City in its Notice to Proceed and shall be fully completed by the dates indicated in the Contract Agreement.
b. The Contractor shall notify the City's Authorized Representative as to the exact time at which he/she proposes to begin any part of the work at least 48 hours in advance of any such start so that line and grade can be established and inspections provided.
c. When work is to be done by City forces, in coordination with City forces, or if City of Muskegon utilities need to be located and/or marked, the Contractor shall provide at least 48 hours' advance notice to the City Department from which the work is requested.
d. The Contractor shall notify "Miss Dig" 48 hours in advance of any work start to allow sufficient time for utility identification and location. The City of Muskegon is NOT a part of the "Miss Dig" program.
e. Before permission can be granted by the Authorized Representative for street closures, it shall be the Contractor's responsibility to notify the police and fire departments and the Department of Public Works and Utilities.

3.0.22 PAYMENTS BY THE CONTRACTOR

a. The Contractor shall provide and pay for all materials, labor, tools, equipment, water, lights, heat, power, transportation, superintendence, temporary construction of every nature, charges, levies, fees or other expenses, and all other services and facilities of every nature necessary for the performance of this Contract and delivery of all improvements embraced therein within the specified time.
b. The Contractor shall pay for all transportation and utility services not later than the 20th day of the calendar month following that in which services are rendered.
c. The Contractor shall pay for all materials, tools, and other expendable equipment to the extent of 90% of the cost thereof, not later than the 20th day of the calendar month following that in which such materials, tools and equipment are delivered at the Project Site, and the balance of cost thereof not later than the 30th day following the completion of that part of the work in or on which such materials, tools and equipment are incorporated or used.

d. The Contractor shall pay to each of his/her Subcontractors, not later than the 5th day following each payment to the Contractor, the respective amounts allowed him/her on account of the work performed by the Subcontractors to the extent of each Subcontractor's interest therein.

3.0.23 SUBCONTRACTS

a. The Contractor shall not execute an agreement with any Subcontractor or permit any subcontractor to perform any work included in this Contract until he/she has submitted a non-collusive affidavit from the subcontractor and received written approval of such subcontractor from the City of Muskegon.
b. The Contractor shall be as fully responsible to the City of Muskegon for the acts and omissions of his/her Subcontractors, and of persons either directly or indirectly employed by them, as he/she is for the acts and omissions of persons directly employed by the Contractor.
c. The Contractor shall cause appropriate provisions to be inserted in all Sub-contracts relative to compliance by each Sub- contractor with the provisions of this Contract.
d. No proposed Subcontractor shall be disapproved by the City of Muskegon except for cause. Nothing contained in this Contract shall create any contractual relation between any Subcontractor and the City of Muskegon.

3.0.24 INSURANCE AND INDEMNITY

a. Hold Harmless Agreements. To the fullest extent permitted by law, Contractor and Subcontractors agree to defend, pay in behalf of, indemnify, and hold harmless the CITY OF MUSKEGON, all elected and appointed officials, all employees and volunteers, all boards, commissions, and/or authorities and board members, including employees and volunteers thereof working on behalf of the CITY OF MUSKEGON against any and all claims, demands, suits, or loss, including all costs connected therewith, and for any damages which may be asserted, claimed or recovered against or from the CITY OF MUSKEGON and their elected and appointed officials, employees, volunteers, or others working on behalf of the CITY OF MUSKEGON by reason of personal injury, including bodily injury and death, property damage, including loss of use thereof, and/or the effects of or release of toxic and/or hazardous material which arises out of or is any way connected or associated with this contract. The obligation to defend and hold harmless extends to Contractor's employees, agents, subcontractors, assigns and successors.
b. The contractor, or any of their subcontractors, shall not commence work under this contract until they have obtained the insurance required under this paragraph, and shall keep such insurance in force during the entire life of this contract. All coverage shall be with insurance companies licensed and admitted to do business in the State of Michigan and acceptable to the CITY OF MUSKEGON. The requirements below should not be interpreted to limit the liability of the Contractor. All deductibles and SIR’s are the responsibility of the Contractor.
c. The Contractor shall procure and maintain the following insurance coverage:
    i. Workers' Compensation Insurance- The Contractor and Subcontractor shall procure and maintain during the life of this contract, Workers' Compensation Insurance, including Employers Liability Coverage in accordance with all applicable Statutes of the State of Michigan.
    ii. Commercial General Liability Insurance - The Contractor shall procure and maintain during the life of this contract, Commercial General Liability Insurance on an "Occurrence Basis" with limits of liability not less than $1,000,000.00 per occurrence and aggregate combined. Coverage shall include the following extensions: (A) Contractual Liability; (B) Products and Completed Operations; (C) Independent Contractors Coverage; (D) Broad Form General Liability Extensions or equivalent, if not already included. Personal Injury, Bodily Injury and Property Damage coverage’s shall be included (E) Deletion of all

explosion, collapse and underground (SCU) exclusions, if applicable. The said insurance shall cover liability caused by the activities of any subcontractor.

iii. Automotive Liability - The Contractor shall procure and maintain during the life of this contract Automotive Liability Insurance, including Michigan No-Fault Coverage's, with limits of liability for third party claims of not less than $1,000,000.00 per occurrence or combined single limit Bodily Injury and Property Damage. Coverage shall include all owned vehicles, all non-owned vehicles and all hired vehicles. The said insurance shall cover liability caused by the activities of any subcontractor.

iv. Additional Insured- Commercial General Liability and Automotive Liability Insurance, as described above, shall include an endorsement stating the following shall be "Additional Insureds" using the following language: "The CITY OF MUSKEGON and all elected and appointed officials, all employees and volunteers, all boards, commissions and/or authorities and board members, including employees and volunteers thereof. It is understood and agreed by naming The CITY OF MUSKEGON as additional insured, coverage afforded is considered to be primary and any other insurance The City of Muskegon may have in effect shall be considered secondary and/or excess.

v. Cancellation Notice- All policies as described above, shall include an endorsement stating that it is understood and agreed Thirty (30) days, Ten (10) days for non-payment of premium, Advance Written Notice of Cancellation, Non-Renewal, Reduction, and/or Material Change shall be sent to: CITY OF MUSKEGON ENGINEERING DEPARTMENT", PO Box 0536, Muskegon, MI 49443-0536

d. Owner's and Contractor's Protective Liability- The Contractor shall procure and maintain during the life of this contract Owner's and Contractor's Protective Liability with limits of liability not less than $1,000,000.00 per occurrence and/or aggregate, combined single limit. Personal injury, Bodily injury and Property Damage coverage's shall be included. The CITY OF MUSKEGON shall be "Named Insured" on this coverage. Thirty (30) day notice of cancellation to the CITY OF MUSKEGON shall be required. Said insurance shall cover liability caused by the activities of any subcontractor(s) either by means of a rider attached to the Prime Contractor's Certificate of Insurance indicating this coverage for subcontractors; or the subcontractor(s) shall submit their own Certificate of Insurance.

e. Proof of Insurance Coverage - The Contractor and Subcontractors shall provide the CITY OF MUSKEGON at the time the contracts are returned by him/her for execution, a Certificate of Insurance as well as the required endorsements. In lieu of required endorsements, if applicable, a copy of the policy sections where coverage is provided for additional insured and cancellation notice would be acceptable. Copies or certified copies of all policies mentioned above shall be furnished. Certificates and policies endorsing the City of Muskegon as additional insured as listed below:

i. Two (2) copies of Certificate of Insurance for

ii. Workers' Compensation Insurance;

iii. Two (2) copies of Certificate of Insurance for Commercial General Liability Insurance;

iv. Two (2) copies of Certificate of Insurance for Automotive Liability Insurance;

v. Original Policy, or original Binder pending issuance of policy, for Owner's and Contractor's Protective Liability Insurance;

vi. If so requested, Certified Copies of all policies mentioned above will be furnished.

f. If any of the above coverage's expires during the term of this contract, the Contractor and Subcontractors shall deliver renewal certificates and/or policies to CITY OF MUSKEGON at least ten (10) days prior to the expiration date.

3.0.25 MATERIALS AND WORKMANSHIP

a. Unless otherwise specifically provided for in the Technical or Special Specifications, all workmanship, equipment, materials and articles the work shall be new and the best grade of the respective kinds for the purpose. Where equipment, materials, articles or workmanship are referred to as "equal to" any particular standard, the City of Muskegon will decide the question of equality.
b. The City of Muskegon may require the Contractor to dismiss from this Project such employee(s) as the City of Muskegon may deem incompetent, careless, and/or insubordinate.

3.0.26 SUPERINTENDENCE BY CONTRACTOR

a. Except where the Contractor is an individual and gives his/her personal superintendence to the work, the Contractor shall provide a competent superintendent, satisfactory to the City of Muskegon, on the work at all times during working hours with full authority to act for the Contractor. The Contractor shall also provide adequate staff for the proper coordination and expediting of the work.
b. The Contractor shall lay out his/her own work, and shall be responsible for all work executed by him/her under this Contract. He/She shall verify all figures and elevations before proceeding with the work and will be held responsible for any error resulting from his/her failure to do so.

3.0.27 FITTING AND COORDINATION OF THE WORK

The Contractor shall be responsible for the proper fitting of all work, and for the coordination of the operations of all trades, subcontractors, or materialmen engaged upon this Contract. He/She shall be prepared to guarantee to each of his/her Subcontractors the locations and measurements which they may require for the fitting of their work to all surrounding work.

3.0.28 MUTUAL RESPONSIBILITY OF CONTRACTORS

a. If, through acts or neglect on the part of the Contractor, any other contractor or any subcontractor shall suffer loss or damage on the work, the Contractor shall settle with such other contractor or subcontractor by agreement or arbitration, if such other contractor or subcontractor will so settle.
b. If such other contractor or subcontractor shall assert any claim against the City of Muskegon on account of any damage alleged to have been so sustained, the City will notify the Contractor, who shall defend at his/her own expense any suit based upon such claim, and, if any judgment or claim against the City is allowed, the Contractor shall pay all costs and expenses in connection therewith.

3.0.29 CARE OF THE WORK

a. The Contractor shall be responsible for all damages to person or property that occur as a result of his/her fault or negligence in connection with the prosecution of the work and shall be responsible for the proper care and protection of all materials delivered and work performed until completion and final acceptance, whether or not the same has been covered in whole or part by payments made by the City.
b. The Contractor shall provide sufficient competent watchmen, both day and night, including Saturdays, Sundays and holidays, from the time the work commences until final completion and acceptance, as needed.
c. In an emergency affecting the safety of life, limb or property, including adjoining property, the Contractor, without special instructions or authorization from the City, is authorized to act at his/her own discretion to prevent such threatened loss or injury, and he/she shall so act. He/She shall likewise act if instructed to do so by the City. Any compensation claimed by the Contractor

on account of such emergency work will be determined by the City as provided in this Contract regarding Change Orders.

d. The Contractor shall avoid damage as a result of his/her operation to existing sidewalks, streets, curbs, pavements, utilities (except those which are to be replaced or removed), adjoining property, etc., and he/she shall at his/her own expense completely repair any damage thereto caused by his/her operation.

e. The Contractor shall shore up, brace, underpin, secure and protect, as may be necessary, all foundations and other parts of existing structures adjacent to, adjoining, and in the vicinity of, the Site which may be in any way affected by the excavations or other operations connected with the execution of this Contract. The Contractor shall be responsible for the giving of any and all required notices to any adjoining or adjacent property owner or other party before commencement of any work. The Contractor shall indemnify and save harmless the City of Muskegon from the damages on account of settlements or the loss of lateral support of adjoining property and from all loss or expense and all damages for which the City may become liable in consequence of such injury or damage to adjoining and adjacent structures and their premises.

3.0.30 SURVEY MONUMENTS

a. Survey monuments relative to governmental surveys such as a U.S. Coast and Geodetic and the City of Muskegon datum plane reference are to be preserved and left undisturbed by the Contractor. Land survey monuments such as Section corners, 1/4 and 1/8 corners, or other alignment points of reference, including property corners of individual parcels of land, are to be respected and left undisturbed. When found in conflict with proposed work, the Contractor shall immediately notify the Authorized Representative in charge of work, whereupon instructions shall be given to the Contractor for preservation of the Survey Point. If housings or boxes for protection are required, the City shall furnish to the Contractor at no cost the necessary materials. The Contractor, in turn, will install the materials at no cost to the City.

b. If the Contractor damages or destroys known Survey Points of reference, the Contractor shall be responsible for replacement of the monument. The work must be accomplished by a registered land surveyor in accordance with accepted procedures for such work. The Contractor shall be responsible for all incurred costs.

3.0.31 SANITARY FACILITIES

The Contractor shall furnish, install and maintain ample sanitary facilities for the workers. As the needs arise, a sufficient number of enclosed temporary toilets shall be conveniently placed as required by the sanitary codes for the state and local government. Drinking water shall be provided from an approved source, so piped or transported as to keep it safe and fresh and served from single-service containers or satisfactory types of sanitary drinking stands or fountains. All such facilities and services shall be furnished in accordance with existing and governing health regulations.

3.0.32 USE OF CITY WATER

Upon request and approval, the Contractor may obtain a water supply from the City of Muskegon fire hydrants at no cost, provided that the following conditions are met and exercised:

i. The Contractor’s superintendent shall obtain from the Water Department Superintendent a proper connection, including a meter to monitor usage.

ii. The Contractor shall only use hydrant wrenches to open and close hydrants; pipe wrenches will not be allowed.

iii. The hydrant shall be fully opened when used; volume shall be controlled by an independent hand valve.

iv. The Contractor's release shall not be granted until the hydrant connection has been returned to the Water Department and such receipt acknowledged.

3.0.33 USE OF PREMISES

a. The Contractor shall comply with all instructions of the City of Muskegon and the ordinances and codes of the local government regarding signs, advertising, traffic, fires, explosives, danger signals and barricades.
b. The Contractor shall confine his/her equipment, storage of materials, and construction/demolition operations to the Contract limits as shown on the drawings and as prescribed by ordinances or permits, or as may be directed by the City, and shall not unreasonably encumber the Site or public rights-of-way with his/her materials and equipment.
c. The Contractor and his/her Subcontractors may maintain such office and storage facilities on the Site as are necessary for the proper conduct of the work. These shall be located so as to cause no interference to any work to be performed on the Site. The City shall be consulted with regard to locations.
d. The Contractor may furnish and maintain, during the execution of this Project, adequate facilities on the Site or adjacent thereto for the use of the City's representatives.
e. Upon completion of the Project, or as directed by the City, the Contractor shall remove all such temporary structures and facilities as have been placed on the Site, these to become his/her property, and leave the Project Site in the condition required by the Contract.

3.0.34 PARTIAL USE OF SITE IMPROVEMENTS BY THE CITY

The City of Muskegon, at its election, may give notice to the Contractor and place in use those sections of improvements which have been completed, inspected and can be accepted as complying with the Contract, if each such section is reasonably safe, fit and convenient, in the City's opinion, for the use and accommodation for which it was intended, PROVIDED THAT:

i. The use of such sections in no way shall impede the completion of the remainder of the work by the Contractor;
ii. The Contractor shall not be responsible for any damages or maintenance costs due directly to the use of such sections;
iii. The use of such sections shall in no way relieve the Contractor of his/her liability due to having used defective materials or due to poor workmanship.

3.0.35 REMOVAL OF DEBRIS, CLEANING, ETC.

The Contractor shall periodically, or as directed during the progress of the work, remove and legally dispose of all surplus excavated material and debris, and keep the Project Site and public rights of way reasonably clear. Upon completion of the work, he/she shall remove all temporary construction facilities, debris and unused materials provided for the work, and put the whole Site of the work and public rights of way in a neat and clean condition. Trash burning on the Site will be subject to prior approval of the City of Muskegon and existing state and local regulations.

3.0.36 ACCIDENT PREVENTION

a. The Contractor shall exercise proper precaution at all times for the protection of persons and property and shall be responsible for all damages to persons or property, either on or off the Site, which occur as a result of his/her prosecution of the work. The safety provisions of applicable laws and building, construction or demolition codes shall be observed, and the Contractor shall take, or cause to be taken, such additional safety and health measures as the City may determine to be reasonably necessary.

b. Machinery, equipment and all hazards shall be guarded in accordance with the safety provisions of the "Manual of Accident Prevention of Construction", published by the Associated General Contractors of America, Inc., to the extent that such provisions are not in conflict with applicable local laws.
c. The Contractor shall maintain an accurate record of all cases of death, occupational disease and injury requiring medical attention or causing loss of time from work, arising out of and in the course of employment on work under this Contract. The Contractor shall promptly furnish the City with reports concerning these matters.
d. The Contractor shall indemnify and save harmless the City of Muskegon from any claims for damages resulting from personal injury and/or death suffered or alleged to have been suffered by any person as a result of any work conducted under this Contract.

3.0.37 SPECIFICATIONS AND DRAWINGS

a. The City of Muskegon will furnish the Contractor without charge one (1) copy of the Contract Documents, including General, Technical and Special Specifications complete with plans, drawings, maps, etc. Additional copies requested by the Contractor will be furnished at cost.
b. In case of discrepancy, figured dimensions shall govern over scaled dimensions; Bid Proposal over plans; plans over Special Specifications; and Special Specifications over General and Technical Specifications.
c. When discrepancies are found in drawings or Specifications, the matter shall be immediately submitted to the City, without whose decision said discrepancy shall not be adjusted by the Contractor except at his/her own risk and expense.

3.0.38 SHOP DRAWINGS FROM THE CONTRACTOR

a. All required shop drawings, machinery details, layout drawings, etc., shall be submitted to the City in three (3) copies for approval sufficiently in advance of requirements to afford ample time for checking, including time for correcting, resubmitting and rechecking, if necessary.
b. The Contractor may proceed, only at his/her own risk, with manufacture or installation of any equipment or work covered by said Shop Drawings, etc., until they are approved. No claim by the Contractor for extension of the Contract Time will be granted by reason of the Contractor's failure in this respect.
c. Any drawings submitted without the Contractor's stamp of approval will not be considered and will be returned to him/her for proper resubmission. If any drawings show variations from the requirements of the Contract because of standard shop practice or other reason, the Contractor shall make specific mention of such variation in his/her letter of transmittal in order that, if acceptable, suitable action may be taken for proper adjustment of Contract Price and/or Time; otherwise, the Contractor will not be relieved of the responsibility for executing the work in accordance with the Contract even though the drawings have been approved.
d. If a shop drawing is in accord with the Contract or indicates only a minor adjustment, in the interest of the City, without involving a change in Contract Price and/or Time, the City may approve the drawing. Such approval shall be general, shall not relieve the Contractor from his/her responsibility for adherence to the Contract or for any error in the drawing, and shall contain substantially the following language:
e. "The modification shown on the attached drawing is approved in the interest of the City of Muskegon to effect an improvement for the Project and is ordered with the understanding that it does not involve any change in the Contract Price or Time; that it is subject generally to all Contract stipulations and covenants; and that it is without prejudice to any and all rights of the City of Muskegon under the Contract and surety bond or bonds."

3.0.39 SAMPLES, CERTIFICATES AND TESTS

a. The Contractor shall submit all equipment samples, certificates, affidavits, etc., as called for, or as required by the City, promptly after award of the Contract and acceptance of the Contractor's bond.
b. The Contractor shall furnish promptly all materials reasonably necessary for any tests which may be required.
c. No such material or equipment shall be manufactured or delivered to the Site, except at the Contractor's own risk, until the required samples or certificates have been approved in writing by the City.
d. Machinery, mechanical or other equipment, materials or articles installed or used without such prior City approval shall be at the risk of subsequent rejection.
e. Each sample submitted by the Contractor shall carry a label giving the name of the Contractor, the Project for which it is intended, and the name of the producer. Each shall be accompanied by a certificate or letter from the Contractor which shall"
    i. State that the sample complies with the Contract requirements;
    ii. Give the name and brand of the product and its place of origin;
    iii. Give the name and address of the producer;
    iv. Include or be accompanied by all specifications or other detailed information which will assist the City in determining the acceptability of the sample promptly;
    v. Include the statement that all materials or equipment furnished for use in the Project will comply with the samples and/or certified statements.
f. Where machinery, mechanical or other special equipment is to be installed under this Contract, the Contractor shall furnish each manufacturer's detailed specifications to the City for approval together with full information in regard to proposed installations.
g. Materials specified by reference to the number or symbol of a specific standard, such as an A.S.T.M. Standard, a Federal specification or other similar standard, shall comply with requirements in the latest revision thereof and any amendment or supplement thereto in effect on the date of the Invitation for Bids, except as limited to type, class or grade, or modified in such reference. The Standards referred to shall have full force and effect as though printed herein.
h. Approval of any materials shall be general only, and shall not constitute a waiver of the City's right to demand full compliance with Contract requirements. With regard to a general approval, the City may reject materials, equipment and accessories for cause after actual delivery to the City and such check tests have been made as deemed necessary in each instance, even though such materials and articles have been given general approval.
i. The City's Authorized Representative may test such materials as deemed advisable on the Project Site.
j. All tests by the City will be performed in such manner as not to delay the work unnecessarily, and shall be made in accordance with the provisions of the Specifications.
k. Any delay in the work caused by late or improper submission of samples or certificates for approval shall not be considered just cause for an extension of the Contract Time.
l. If materials, equipment or accessories which fail to meet check tests have been incorporated in the work, the City will have the right to cause their removal and replacement by proper materials, or to demand and secure such reparation by the Contractor as is equitable.
m. Except as otherwise specifically stated in this Contract, the costs of sampling and testing will be divided as follows:
    i. The Contractor shall furnish without extra cost, including packing and delivery charges, all samples required for testing purposes;
    ii. The Contractor shall assume all costs of re-testing materials which fail to meet Contract requirements;

iii. The Contractor shall assume all costs of testing materials offered in substitution for those found deficient; and

iv. The City of Muskegon will pay all other expenses for testing.

n. Certificates of Compliance: In lieu of test samples and upon request of the City, the Contractor shall provide, upon delivery and through his/her supplier, a witnessed, notarized and signed certification complete with documented test results that the material meets or exceeds the desired specifications. The signer of the certification must be titled officer of the material company, and the documented test results must be obtained through an independent testing laboratory. Costs for such documentation shall be borne by the Contractor.

3.0.40 INSPECTION BY THE CITY

a. All materials and workmanship shall be subject to inspection, examination, and/or test by the City of Muskegon at any and all time during manufacture or construction and at any and all places where such manufacture or construction is carried on. The inspection of materials as a whole, or in part, will generally be made at the Project Site, subject to the provisions of paragraph b following.

b. Inspection of materials and appurtenances to be incorporated in the improvements embraced in this Contract may be made at the place of production, manufacture or shipment whenever the quantity justifies it. Such inspection and acceptance, unless otherwise stated, shall be final, except in regard to (1) latent defects, (2) departures from specific requirements of the Contract, (3) damage or loss in transit, or (4) fraud or such gross mistakes as amount to fraud.

c. The City shall have the right to reject defective material and workmanship or require its correction. Unacceptable workmanship shall be satisfactorily corrected. Rejected material shall be promptly segregated and removed from the Project Site and replaced with material of specified quality without charge therefor.

d. If the Contractor fails to proceed at once with the correction of rejected workmanship or defective material, the City may, by contract or otherwise, have the defects remedied, or rejected materials removed from the project area, and charge the cost of the same against the monies which may be due the Contractor without prejudice to any other rights or remedies of the City.

e. The Contractor shall notify the City sufficiently in advance of back-filling or concealing any facilities to permit proper inspection. If any facilities are concealed without approval or consent of the City, the Contractor shall uncover for inspection, and recover, such facilities all at his/her own expense, when so requested by the City of Muskegon.

f. Should it be considered necessary or deemed advisable by the City at any time before final acceptance of the entire work to make an examination of work already completed by uncovering the same, the Contractor shall, on request, promptly furnish all necessary facilities, labor and/or material.

g. If such work is found to be defective in any important or essential respect due to the fault of the Contractor or the fault of his/her Subcontractors, the Contractor shall defray all the expenses of such examination and or satisfactory reconstruction.

i. If, however, such work is found to meet the requirements of the Contract, the actual cost of labor and material necessarily involved in the examination and replacement, plus 15% of such costs to cover superintendence, general expenses and profit, shall be allowed the Contractor; and he/she shall be granted in addition a suitable extension of time if completion of the work under the entire Contract has been delayed on account of the additional work involved by such request.

ii. A semi-final inspection will be scheduled by the City when all construction has been completed.

iii. When the City has accomplished its semi-final inspection, determined all deficiencies (if any) have been corrected, and the project is completed and functional, a final inspection will be scheduled.

h. Neither inspection, testing, approval nor acceptance of the work in whole of in part by the City or its agents shall relieve the Contractor or his/her sureties of full responsibility for materials furnished or work performed not in strict accordance with the Contract.

3.0.41 CHANGES IN THE WORK

a. Except for the purpose of affording protection against any emergency endangering life or property, the Contractor shall make no change in the materials used; in the specified manner of constructing and/or installing the Improvements; nor supply additional labor, services or materials beyond that actually required for the execution of the Contract, unless pursuant to a written order from the City authorizing the Contractor to proceed with the change. No claim for an adjustment of the contract price will be valid unless so ordered.
b. The City may make changes in the scope of the work required to be performed by the Contractor under the Contract; make additions thereto; or omit work therefrom without invalidating the Contract; without relieving or releasing the Contractor from any of his/her obligations under the Contract or any guarantee given by him/her pursuant to the Contract; without affecting the validity of the guaranty bonds; and without relieving or releasing the surety or sureties of said bonds.
c. All such changes in work shall be executed under the terms of the original Contract as expressly provided for.
d. In the case where unit prices ARE contained in the Agreement, the City may order the Contractor to proceed with desired changes in the work with the value of such changes being determined by the measured quantities involved and the applicable unit prices specified in the Contract, unless said changes increase or decrease the total contract price more than twenty-five percent (25%).

3.0.42 CHANGE ORDERS

a. Change Orders shall be executed:
    i. If applicable unit prices ARE NOT contained in the Proposal;
    ii. If the total net change ordered by the City increases or decreases the contract price more than twenty-five percent (25%);
    iii. If it becomes necessary to revise the completion date due to causes which are not the fault of the Contractor;
    iv. Upon successful completion of the Project and after final quantities are in confirmation, a Change Order Balance shall be made out by the Authorized Representative and executed by both parties. This quantity balance shall identify the total project cost and allow the Contractor to present the written Request for Final Payment.

b. Acceptable Methods for Cost Determination:
    i. Unit Price Method – The City shall request and the Contractor shall submit a written proposal describing each individual unit of work and the unit price for each item.
    ii. Lump Sum Method – The City shall request and the Contractor shall submit a written proposal describing the work and the lump-sum price for the described work.
    iii. Cost-Plus, Limited Basis Method – If other methods are not acceptable and prompt agreement between the parties cannot be reached, the City may order the Contractor to proceed with the work on a cost-plus, limited basis. A Cost-Plus, Limited Basis is defined as the net cost of the Contractor's labor, materials and equipment plus 15% of said net cost to cover overhead and profit. The total cost not to exceed an amount to be specified.
        1. Costs not eligible to be included in the Cost-Plus, Limited Basis are: Insurances, bonds, payroll costs for the Contractor's officers or executives, managers, engineers, lawyers or administrative personnel. These typical costs are to be considered a part of the overhead factor.

iv. City of Muskegon Credit Method – If the City deems it not expedient to require the Contractor to correct work not done in accordance with the Contract, the City may issue a Credit Change Order to create an equitable deduction from the Contract Price. Said deduction will be made by agreement between the Contractor and the City of Muskegon and subject to settlement, in case of dispute, as provided in these Documents.

c. Change Order Procedure – After the Contractor's proposal has been reviewed and found acceptable by both parties, the City will prepare a Change Order in accordance therewith for execution by the Contractor on the appropriate form required by the funding agency or by using the City of Muskegon change order form.

d. Change Order Procedure Documentation shall include:

i. A detailed reason for and description of the work, its location, quantity, rate and method of payment as described above.

ii. A definite statement as to the resulting change in the Contract Price and/or time.

iii. The statement that all work involved in the change shall be performed in accordance with the Contract requirements except as modified by this Change Order.

3.0.43 DISPUTES AND CLAIMS

a. All disputes arising under this Contract or its interpretation, except those disputes covered by Federal Labor Provisions, whether involving law or fact, or both, or extra work, and all claims for alleged breach of Contract shall be presented by the Contractor to the City for decision within ten (10) days of commencement of dispute.

b. All papers pertaining to claims shall be filed in quadruplicate. Such notice need not detail the amount of the claim but shall state the facts surrounding the claim in sufficient detail to identify and prove the claim, together with its character and scope. In the meantime, the Contractor shall proceed with the work as directed.

c. Any claim not presented within the time limit specified in Paragraph (a) above shall be deemed to have been waived, except that if the claim is of a continuing character and notice of the claim is not given within then (10) days of its commencement, the claim will be considered only for a period commencing ten (10) days prior to the receipt by the City of notice thereof.

d. After review of the claim, the City will decide upon action to be taken. Each decision by the governing body of the City of Muskegon will be in writing and will be mailed to the Contractor by registered mail, return receipt requested, directed to his/her last known address.

e. If the Contractor does not agree with any decision of the City, he/she shall in no case allow the dispute to delay the work but shall notify the City promptly that he/she is proceeding with the work under protest, and he/she may then except the matter in question from the final release upon Request for Final Payment in substantially.

3.0.44 CLAIMS FOR EXTRA COST

a. If the Contractor claims that any instructions by drawings or otherwise involve extra cost or extension of time, he/she shall, within ten (10) days after the receipt of such instructions, and in any event before proceeding to execute the work, submit his/her protest thereto in writing to the City stating clearly and in detail the basis of this objection. No such claim will be considered unless so made.

b. Claims for additional compensation for extra work due to alleged errors in ground elevations, contour lines, or bench marks will not be recognized unless accompanied by certified survey data made prior to the time the original ground was disturbed, which clearly shows that errors exist which resulted, or would result, in handling more material or performing more work than would be reasonably estimated from the drawings and maps issued.

c. Any discrepancies which may be discovered between actual conditions and those represented by the drawings and maps shall at once be reported to the City, and work shall not proceed except at the Contractor's risk until written instructions have been received by him/her from the City.
d. If, on the basis of the available evidence, the City determines that an adjustment of the Contract Price and/or Contract Time is justifiable, the procedure shall be as provided in Item 39 (Part 3, Section 1), Change Orders.

3.0.45 DELAYS AND LIQUIDATED DAMAGES

a. Liquidated Damages for Delays. If the work is not completed within the time stipulated in this Contract, including any extensions of time for excusable delays as provided, the Contractor and/or his sureties shall be liable for and shall pay to the City of Muskegon sum of three hundred dollars ($300.00) for each calendar day of delay as fixed, agreed and liquidated damages (it being impossible to determine the actual damages occasioned by the delay), commencing from the time stipulated for completion until such work is satisfactorily completed and accepted.
b. Excusable Delays. The right of the Contractor to proceed shall not be terminated nor shall the Contractor be charged with liquidated damages for any delays in the completion of the work DUE TO:
   i. Any acts of government, including controls or restrictions upon or requisitioning of materials, equipment, tools or labor by reason of war, national defense or any other national emergency;
   ii. Any acts of the City of Muskegon;
   iii. Causes not reasonably foreseeable by the parties to this Contract at the time of the execution of the Contract which are beyond the control and without the fault or negligence of the Contractor including, but not restricted to: Acts of God or of the public enemy; acts of another contractor in the performance of some other contract with the City; fires; floods; epidemics; quarantine; restrictions; strikes; freight embargoes; and weather of unusual severity such as hurricanes, tornadoes, cyclones and other extreme weather conditions; and
   iv. Any delay of any Subcontractor occasioned by any of the causes specified in subparagraphs 1, 2 and 3 above.

   PROVIDED, HOWEVER, that the Contractor promptly notify the City within ten (10) days in writing of the cause of the delay.
c. Upon receipt of such written notification, the City shall ascertain the facts and the cause and extent of the delay. If, upon the basis of the facts and in compliance with the terms of this Contract, the delay is properly excusable, the City shall extend the time for completing the work for a period of time commensurate with the period of excusable delay through the execution of a written Change Order.

3.0.46 PAYMENTS TO THE CONTRACTOR

a. Partial Payments
   i. Partial payments will be made as specified herein for work completed and for fabricated or processed non-perishable materials delivered for the use on the project. Processing of payments will be completed as soon as practicable; however, no claim will be considered for late payment of estimates.
   ii. Partial payments will be issued on the second Friday of each month on the basis of the value of the work completed during the estimate period, less the percentage retained as specified herein, provided the written orders of the Engineer have been or are being fulfilled, provided the time for completion has not elapsed, and provided that at least one-half of the contract amount or $1,000 has been earned during the estimate period. Said payments will be based upon estimates prepared

by the Engineer of the value of the work performed, and estimates of the Engineer are subject to final balancing at the time of the final estimate. In the event that the prepared estimate is not submitted with sufficient time to process payment on the second Friday of the month, payment of the estimate will be processed for payment on the fourth Friday of the month. As a result, the Engineer's estimates may not be relied upon by a Contractor as a basis to make payment to a Subcontractor.

iii. Before each payment by the City to the Contractor under this contract, the Contractor shall furnish the City with a certificate in duplicate, substantially to the effect that the Contractor and each Subcontractor has complied with the wage and other labor standards provisions of this contract. The Form of certificate to be used will be furnished by the City.

iv. Before making any partial payment, the City may require the Contractor to present a verified written statement showing the amounts he/she owes for labor performed and materials furnished along with the names and addresses of the persons to whom which sums are due.

v. In case the Contractor shall have sublet a part of the work, the statement shall also show the sum owed to the Subcontractor showing names and addresses of persons performing labor or furnishing material under that subcontract along with the respective amounts due such persons.

vi. The City must pay the amounts due directly to the creditors of the Contractor or Subcontractor so listed, deducting the amount from that due the Contractor or Subcontractor.

vii. Partial payments made by the City to the Contractor are monies advanced for the purpose of assisting the Contractor to expedite the work under this contract. The Contractor shall be responsible for the care and protection of all materials and work upon which payments have been made until final acceptance of such work and materials by the City.

viii. Any such partial payments shall not constitute a waiver of the right of the City to require the fulfillment of all terms of the contract, and the delivery of all improvements embraced therein, complete and satisfactory in all details.

b. Withholding Payments

i. The City may withhold from any payment otherwise due the Contractor so much as may be necessary to protect the City of Muskegon.

ii. The City may also elect to withhold any amounts the Contractor owes to any subcontractor or materials dealer for work performed or materials furnished by them.

iii. Any amount due to the City of Muskegon for liquidated damaged, or other purposes as provided under the terms of this contract, shall be deducted from the final payment due the Contractor.

iv. The foregoing provisions shall be construed solely for the benefit of

v. the City of Muskegon and will not require the City Commission to determine or adjust any claims or disputes between the Contractor and his/her Subcontractors or materials dealers, or to withhold any monies for their protection unless the City Commission elects to do so.

vi. The failure or refusal of the City to withhold any monies from the

vii. Contractor shall in nowise impair the obligations of any surety or sureties under any bond or bonds furnished under this contract.

viii. Right of Setoff. The City is entitled by this agreement to set off and retain from any payment to the Contractor or any Subcontractor or material supplier, all amounts which are due and owing to the City of Muskegon from said Contractor, Subcontractor, or material supplier for any reason,. The said right or setoff also applies to any unpaid taxes to be collected by the City. This right of setoff shall be subject only to the right of a surety providing bonds or guarantees for the project be due and owing to a Subcontractor or material supplier, and which are required to be paid by the surety. If no claim against any such surety has been made, then this right of setoff shall be invoked.

ix. This right to setoff shall not apply in the case of non-management individuals employed by a Contractor or Subcontractor who have claims solely for wages earned in the performance of labor

in this project. In the event there remain outstanding such claims for labor, the right of setoff shall be subordinate to such claims even though no claim against a surety has been made.

c. Final Payment

i. Final payment to the Contractor shall be made subject to the furnishing of a satisfactory release of all claims against the City arising under and by virtue of this contract, other than such claims as may be specifically excepted by the Contractor from the operation of release as provided under "Disputes and Claims".

ii. The Contractor shall prepare his/her Requisition for Final Payment after final inspection and acceptance by the City for all work under the contract.

iii. The Contractor shall additionally secure the consent of his/her surety in regard to Final Payments as well as the retainage withheld by the City.

iv. Requisition for Final Payment can be based upon the total project dollar amount as described in the required Balancing Change Order. The total amount of the final payment will be that amount agreed upon by the parties hereto MINUS all previous payments.

v. Before making final payment, the City may require the Contractor to furnish releases or receipts from all Subcontractors having performed any work and from all persons having supplied materials, equipment installed on the project, and services to the Contractor.

vi. If the City deems it advisable to make payment in part or full to the Contractor without requiring the furnishing of such releases or receipts, any payments so made shall in nowise impair the obligations or any surety or sureties furnished under this contract.

3.1 TIME CHANGE ORDER

Project No.: _____ **Contract No.:** _____

Contractor Information:

Company Name: _____

Street Address: _____

City, State Zip: _____

Contact Name: _____

Requested Time Change Order Date: _____

In connection with the above referenced Contract, dated: _____,
for the Project entitled: _____,
The following change is ordered, subject to conditions hereinafter set forth:
The Contract Time is extended _____ calendar days from the original
Contract Completion Date of: _____ to: _____.

The City of Muskegon has duly determined that:

- The delay was due to unforeseeable causes beyond your control and without your fault or negligence:
- Notice of the cause of the delay was given within the time and in the manner prescribed by the Contract.
- The causes of delay justify and require an extension of the time as herein provided as a matter of legal right without the assertion of a claim by the owner for (actual) (liquidated) damages because of the Contractor's failure to complete the work within the number of days specified by the Contract.

The aforementioned changes, and work affected thereby, are subject to all contract stipulation and covenants.
The Rights of the city of Muskegon are not prejudiced.
All claims against the City of Muskegon which are identical to or as a consequence of the aforementioned change are satisfied

---

Contractor Approval

_____

Authorized Representative Signature Date

_____

Printed Name Title

_____

Prepared By Date

City of Muskegon Approval

_____

Authorized Representative Signature Date

_____

Printed Name Title

3.2 CONTRACT CHANGE ORDER

CONTRACTOR	CONTRACT	DATE	11/10/2017
		CHANGE ORDER No.	1

	ITEM OF WORK DESCRIPTION, REASON, LOCATION OF CHANGE	UNIT OF MEASURE	QUANTITY PROPOSAL	QUANTITY AS BUILT	QUANTITY INCREASE +	QUANTITY DECREASE -	UNIT COST	AMOUNT INCREASE	AMOUNT DECREASE
1								$0.00	$0.00
2								$0.00	$0.00
3								$0.00	$0.00
							TOTALS	$0.00	$0.00

MUSKEGON

West Michigan's Shoreline City

www.shorelinecity.com

CHANGE REQUEST EFFECIVE DATE:

ORIGINAL CONTRACT PRICE: $0.00

NET +/- $0.00

REVISED CONTRACT PRICE: $0.00

ENGINEERING DEPARTMENT	CONTRACTOR APPROVAL	CITY OF MUSKEGON APPROVAL
	AUTHORIZED REPRESENTATIVE AND DATE	AUTHORIZED REPRESENTATIVE AND DATE
PREPARED BY DATE	PRINTED NAME AND TITLE	PRINTED NAME AND TITLE

3.3 CONTRACTOR'S CERTIFICATE & RELEASE REQUEST FOR FINAL PAYMENT

FROM:_____

TO: The City of Muskegon

RE: Contract No._____

ENTERED INTO THE _____ DAY OF _____ BETWEEN THE CITY OF MUSKEGON, 933 Terrace Street, Muskegon, Michigan 49443, AND

_____

(Contractor) (City) (State) (ZIP)

FOR THE PURPOSE OF:_____

_____

(Name of Operations to be performed)

UNDER THE CONTRACT ENTITLED:_____

PROJECT NO._____

LOCATED IN THE CITY OF MUSKEGON, MICHIGAN;

KNOW ALL MEN BY THESE PRESENTS:

1. The undersigned hereby certifies that there is due from and payable by the CITY OF MUSKEGON to the CONTRACTOR under the Contract and duly approved Change Orders and modifications THE BALANCE OF $.

2. The undersigned further certifies that in addition to the amount set forth in Paragraph 1, there are outstanding and unsettled the following items which the Contractor claims are just and due and owing by the City of Muskegon to the Contractor:
   a. _____
   b. _____
   c. _____
   d. _____
   (Itemize claims and amounts due; if none, so state)

3. The undersigned further certifies that all work required under this Contract, including work required under Change Orders Nos. _____, has been performed in accordance with the terms thereof, and that there are no unpaid claims for materials, supplies or equipment and no claims of laborers or mechanics for unpaid wages arising out of the performance of this Contract, and that the wage rates paid by the Contractor and all Subcontractors were in conformity with the Contract provisions relating to said wage rates.
4. Except for the amounts stated under Paragraphs 1 and 2 hereof, the undersigned has received from the CITY OF MUSKEGON all sums of money payable to the undersigned under or pursuant to the above-mentioned Contract or any modification or change thereof.

*Date contract awarded by the City commission

(CONTRACTOR'S CERTIFICATE AND RELEASE – Continued)

5. That in consideration of the payment of the amount stated in Paragraph 1 hereof, the undersigned does hereby release the CITY OF MUSKEGON from any and all claims arising under or by virtue of this Contract, except the amount listed in Paragraph 2 hereof; provided, however, that if for any reason the City of Muskegon does not pay in full the amount stated in Paragraph 1 hereof, said deduction shall not affect the validity of this release, but the amount so deducted shall be automatically included under Paragraph 2 as an amount which the Contractor has not released but will release upon payment thereof.

   The Contractor further certifies that upon the payment of the amount listen in Paragraph 2 hereof, and of any amount which may be deducted from Paragraph 1 hereof, the Contractor will release the City of Muskegon from any and all claims of any nature whatsoever arising out of said Contract or modification thereof, and will execute such further releases or assurances as the City may request.

IN WITNESS WHEREOF, the undersigned has signed and sealed this instrument this _____ day of _____, 20 _____ .

CONTRACTOR: _____

(SEAL) BY _____

_____
(Printed name and title of signer)

_____, the affiant signing this instrument, being first duly sworn on oath, deposes and says: First, that he/she is the

_____(title) of the _____
(name of company)

Second, that he/she has read the foregoing certificate by him/her subscribed as _____ _____ (title) of the _____.

Affiant further states that the matters and things stated are, to the best of his/her knowledge and belief, true.

Affiant: _____

Subscribed and sworn to before me this _____ day of _____, 20 _____

_____
Notary

My commission expires _____

3.4 CONTRACTOR AFFIDAVIT - SURETY RELEASE

State of Michigan)
) ss
County of Muskegon)

_____
(Contractor)

Being duly sworn, deposes and says that he/she entered into a contract with the City of Muskegon on the _____ day of _____ for the construction of the City of Muskegon.

PROJECT NO._____ PROJECT TITLE:_____

Deponent further says that the work under the terms of the said contract has been completed and all indebtedness incurred by him/her to subcontractors, material suppliers, and persons in his/her employ has been paid in full.

Deponent further says this affidavit is furnished before final payment, or before the ten percent (10%) withheld in accordance with the contract may be reduced.

Deponent further says this affidavit is made pursuant to provisions of Public Act 179 of 1891, section 4, as amended.

Witnesses: SIGNED

_____ _____

_____ _____

Subscribed and sworn to before me this _____day of _____, 20

_____
Notary Public

Commission expires _____

3.5 CONSENT OF SURETY

We, as surety on the above described contract, hereby give our consent to the payment to the Contractor as indicated above.

Date: _____ Signed:_____

(Attorney-in-fact)

NOTE: Two completed copies of this or similar form MUST BE SUBMITTED to and accepted by the City of Muskegon BEFORE REDUCTION OF 10% RETAINAGE AND FINAL PAYMENT WILL BE MADE.

***Date contract awarded by the city commission**

SECTION 2

3.6 AFFIRMATIVE ACTION

NOTICE OF REQUIREMENT FOR AFFIRMATIVE ACTION

TO INSURE EQUAL EMPLOYMENT OPPORTUNITY AND

PROHIBITING DISCRIMINATION IN EMPLOYMENT

(Federal Executive Order 11246)
Michigan: Elliot-Larson Civil Rights Act

The attention of bidders is particularly called to the requirements for ensuring that employees and applicants for employment are not discriminated against.

During the performance of this contract, the contractor agrees as follows:

The contractor will not discriminate against any employee or applicant for employment because of religion, race, color, national origin, age, sex, height, weight, familial status, marital status, disability, sexual orientation or gender identity, or status as a Vietnam Era Veteran. The contractor will take affirmative action to ensure that applicants are employed and that employees are treated fairly during employment, without regard to their religion, race, color, national origin, age, sex, height, weight, familial status, marital status, disability, sexual orientation or gender identity, or veteran background. Such action shall include, but not be limited to, the following: employment, promotion, demotion, or transfer; recruitment or recruitment advertising, layoff or termination; rates of pay or other forms of compensation; selection for training, including apprenticeship.

LOCAL EMPLOYMENT EFFORT

The City of Muskegon requires that the contractor must hire local trades and labor employees from the City of Muskegon, County of Muskegon and/or this SMSA (Standard Metropolitan Statistical Area) for the duration of this project, insofar as these are available to perform the necessary work. Supervisory and/or technical staff officials are exempt from this requirement.

LABOR STANDARDS PROVISIONS
EMPLOYMENT AND PREVAILING WAGE AND SALARY REQUIREMENTS

The attention of bidders is particularly called to the requirements covered in these documents concerning the payment of not less than the prevailing wage and salary rates specified, and in regard to conditions of employment with respect to certain categories and classifications of employees.

All laborers and mechanics employed by this contract shall be paid unconditionally and not less than once each week, and without subsequent deduction or rebate on any account (except such payroll deductions as are permitted by the applicable regulations issued by the City of Muskegon).

SECTION 3

3.7 ADOPTED LABOR STANDARDS PROVISIONS

(The following clause is applicable unless this contract is exempt under the rules and regulations of the Secretary of Labor issued pursuant to Executive Order No. 11246 of September 24, 1965 (30 FR 12319), as amended.)

During the performance of this contract, the contractor agrees as follows:

(1) The contractor will not discriminate against any employee or applicant for employment because of race, color, religion, sex, or natural origin. The contractor will take affirmative action to ensure that applicants are employed, and that employees are treated during employment, without regard to their race, color, religion, sex, or national origin. Such action shall include, but not be limited to the following: employment, upgrading, demotion, or transfer; recruitment or recruitment advertising; layoff or termination; rates of pay or other forms of compensation; and selection for training, including apprenticeship. The contractor agrees to post in conspicuous places, available to employees and applicants for employment, notices to be provided by the contracting officer setting for the provisions of this nondiscrimination clause.

(2) The contractor will, in all solicitations or advertisements for employees placed by or on behalf of the contractor, state that all qualified applicants will receive consideration for employment without regard to race, color, religion, sex, or national origin.

(3) The contractor will send to each labor union or representative of workers with which he has a collective bargaining agreement or other contract or understanding, a notice, to be provided by the agency contracting officer, advising the labor union or workers' representative of the contractor's commitments under Section 202 of Executive Order No. 11246 of September 24, 1965, and shall post copies of the notice in conspicuous places available to employees and applicants for employment.

(4) The contractor will comply with all provisions of Executive Order No. 11246 of September 24, 1965, and of the rules, regulations, and relevant orders of the Secretary of Labor.

(5) The contractor will furnish all information and reports required by Executive Order No. 11246 of September 24, 1965, and by the rules, regulations and orders of the Secretary of Labor, or pursuant thereto, and will permit access to his books, records, and accounts by the contracting agency and the Secretary of Labor for purposes of investigation to ascertain compliance with such rules, regulations, and orders.

(6) In the event of the contractor's noncompliance with the nondiscrimination clauses of this contract or with any of such rules, regulations, or orders, this contract may be canceled, terminated, or suspended in whole or in part and the contractor may be declared ineligible for further Government contracts in accordance with the procedures authorized in Executive Order No. 11246 of September 24, 1965, and such other sanctions may be imposed and remedies invoked as provided in Executive Order No. 11246 of September 24, 1965, or by rule, regulation, or order of the Secretary of Labor, or as otherwise provided by law.

(7) The contractor will include the provisions of paragraphs (1) through (7) in every subcontract or purchase order unless exempted by rules, regulations, or orders of the Secretary of Labor issued pursuant to Section 204 of Executive Order No. 11246 of September 24, 1965, so that such provisions will be binding upon each subcontractor or vendor. The contractor will take such action with respect to any subcontract or purchase order as may be directed by the Secretary of Labor as a means of enforcing such provisions including sanctions for noncompliance: Provided, however, that in the event the contractor becomes involved in, or is threatened with, litigation with a subcontractor or vendor as a result of such direction, the contractor may request the United States to enter into such litigation to protect the interests of the United States.

****

(NOTE: Some contractors prefer to use the following language which is much briefer but also satisfies their obligation.)

3.8 EQUAL EMPLOYMENT OPPORTUNITY CLAUSE
(Incorporated by Reference)

"The Equal Employment Opportunity Clause required under Executive Order 11246, the affirmative action commitment for disabled veterans and veterans of the Vietnam era, set forth in 41 CFR 60-250.4, the affirmative action clause for handicapped workers, set forth in 41 CFR 60-741.4, and the related regulations of the Secretary of Labor, 41 CFR Chapter 60, are incorporated by reference in this purchase order. By accepting this purchase order, vendor certifies that it complies with the authorities cited above, and that it does not maintain segregated facilities or permit its employees to perform services at locations where segregated facilities are maintained, as required by 41 CFR 60-1.8."

3.9 ANTI-KICKBACK ACT

NOTICE TO CONTRACTORS: The Contractor shall comply with the applicable regulations of the Secretary of Labor, United States Department of Labor, made pursuant to the Copeland AntiKickback Act (Title 40 U.S.C., Section 276c), and any amendment or modifications thereof, shall cause appropriate provisions to be inserted in subcontracts to insure compliance therewith by all subcontractors subject thereto, and shall be responsible for the submission of affidavits required by subcontractor thereunder, except as said Secretary of Labor may specifically provide for reasonable limitations, variations, tolerance, and exemptions from the requirements thereof.

Copeland "Anti-Kickback" Act Policy

The Copeland "Anti-Kickback" Act prohibits contractors or subcontractors engaged in building construction or repair from persuading an employee to give up any part of the compensation to which he or she is entitled under his or her employment contract.

NOTICE TO MUNICIPAL EMPLOYEES: *Any employee who offers or approves the offer of a business consideration must ensure that it is ethical and proper in all respects. The offer of a business consideration cannot reasonably be interpreted as an attempt to gain an unfair business advantage or otherwise reflect negatively on the reputation of the City of Muskegon and/or the recipient. The business consideration shall not violate this anti-kickback policy.*

The City of Muskegon's (Muskegon) staff, representatives, and contractors are prohibited from receiving unreasonable compensation from grantors, grantees, contractors, applicants, or any other person or individual for the purpose of receiving preferential treatment of any kind. The guidelines below define Muskegon's policy toward kickbacks and the penalties for offering kickbacks to Muskegon employees, representatives or contractors.

Definition: "*Kickback*" for the purposes of this policy (excluding de minimis gifts), means substantial money, fees, commission, gifts, gratuity, object of value, or offer of employment, which is provided or offered, directly or indirectly, to any City of Muskegon employee, contractor or contracted employee, vendor or vendor employee, or consultant for the purpose of improperly obtaining or rewarding favorable treatment in connection with a City of Muskegon project or contract.

This policy prohibits any person or organization from:

Providing or attempting to provide or offering to provide kickbacks;
Soliciting, accepting or attempting to accept kickbacks; or
Including, directly or indirectly, the amount of kickbacks in any contract awarded by City of Muskegon, contractors, or subcontractors.

Any employee found to be in violation of this policy will be subject to an investigation by the City of Muskegon's Compliance Officer to determine if the policy was infringed upon.
Depending on the results of the investigation, appropriate discipline will be determined. The employee may be subject to civil or criminal penalties as provided under U.S. law.

Any applicant, grantee, contractor, consultant, or vendor in violation of this policy will be prohibited from participation in any City of Muskegon project, contract, or activity and may be subject to additional civil or criminal penalties as provided under U.S. law (Title 40 U.S.C., Section 276c).

Muskegon reserves the right to recover damages from any person who knowingly engages in such prohibited conduct and from any person whose employee, contractor, or subcontracted employee provides, accepts, or charges a kickback.

SECTION 4

3.10 PREVAILING WAGE

Prevailing Wage is Not Applicable in this contract.

PART 4 – ENGINEERING SPECIFICATIONS

DIVISION 1
GENERAL DEFINITIONS

Whenever the words hereinafter defined, or any pronouns used in their stead, occur in Contract or any included documents, they shall have the meanings herein given.

A.S.T.M. - The American Society for Testing Materials

A.N.S.I. - American National Standards Institute

A.W.W.A. - American Water Works Association

A.A.S.H.O. - The American Association of State Highway Officials

M.D.O.T. - Michigan Department of Transportation

M.M.U.T.C.D. - Michigan Manual of Uniform Traffic Control Devices

CITY - City of Muskegon

COUNTY - Muskegon County

D.E.Q. - Department of Environmental Quality

DIVISION 17
PUBLIC UTILITIES

GAS – The DTE Energy (Michigan Consolidated Gas Company) requests that the Contractor refrain from cutting any gas lines. The Contractor will work around the live gas mains, if the Contractor requests the removal of a live gas line to make construction easier, the Gas Company will do this cutting with their own crew and bill the Contractor for this work. If an abandon gas main is in the way of construction the Gas Company will make the first cut to confirm that it is abandoned, at no cost to the Contractor, after this the Contractor can remove the abandon gas main as needed. This work shall be included item of work being performed and no payment shall be made by the City or the Gas Company.

Where the Contractor encounters any gas line that is parallel or transversally to the trench that he is excavating, he is to support the gas line until the back filling is in place. Where conditions are such that this would be impossible, he is to sheet the trench or brace the pipe so that it meets with the satisfaction of the Engineer and the Gas Company. This work shall be included item of work being performed and no payment shall be made by the City or the Gas Company.

The Contractor shall call MISS DIG three (3) Working Days Excluding Saturday, Sunday and Holidays before digging 1-800-482-7171, for staking the location of the existing gas mains. The Contractor will be responsible for any damages that occur during the course of his excavation to any of the Gas Company utilities.

POWER - The Consumers Energy Company will not brace or support any power poles, if any power poles need to be braced or supported during the construction the Contractor will be responsible for this work, there may be instances where sheeting by each pole would more desirable than bracing, all of the above work shall be included item of work being performed and no payment shall be made by the City or the Power Company for bracing or supporting power poles.

No poles may be moved or climbed by anyone except employees of the Consumers Energy Company. Power poles in conflict with construction will be moved by Consumers Energy Company at no cost to the contractor, if the Contractor requests the relocating of a power pole to make construction easer, the Power Company will do this relocating with their own crew and bill the Contractor for this work. No payment shall be made by the City or the Power Company for the above work.

The Contractor shall call MISS DIG three (3) Working Days Excluding Saturday, Sunday and Holidays before digging 1-800-482-7171, for staking the location of the existing electric lines. The Contractor will be responsible for any damages that occur during the course of his excavation to any of the Power Company utilities.

TELEPHONE - The Verizon Telephone Company will not brace or support any phone poles, if any phone poles need to be braced or supported during the construction the Contractor will be responsible for this work, there may be instances where sheeting by each pole would more desirable than bracing, all of the above work shall be included item of work being performed and no payment shall be made by the City or the Phone Company for bracing or supporting phone poles.

No poles may be moved or climbed by anyone except employees of the Phone Company. Phone poles in conflict with construction will be moved by the Phone Company at no cost to the contractor, if the Contractor requests the relocating of a phone pole to make construction easer,

the Phone Company will do this relocating with their own crew and bill the Contractor for this work. No payment shall be made by the City or the Phone Company for the above work.

Where the Contractor encounters any underground conduits that are parallel or transversally to the trench that he is excavating, he is to support the conduits until the back filling is in place. Where conditions are such that this would be impossible, he is to sheet the trench or brace the conduit so that it meets with the satisfaction of the Engineer and the Phone Company. No payment shall be made by the City or the Phone Company for the above work.

The Contractor shall call MISS DIG three (3) Working Days Excluding Saturday, Sunday and Holidays before digging 1-800-482-7171, for staking the location of the existing phone lines. The Contractor will be responsible for any damages that occur during the course of his excavation to any of the Phone Company utilities.

CABLE T.V. - The Comcast Cable T.V. Company uses the phone and power poles, and if any phone or power poles are relocated the Cable Company will relocate with them at no cost to the Contractor, if the Contractor request the relocating of a cable lines to make construction easier, the Cable Company will do this relocating with their own crew and bill the Contractor for this work. . No payment shall be made by the City or the Cable Company for the above work.

The Contractor shall call MISS DIG three (3) Working Days Excluding Saturday, Sunday and Holidays before digging 1-800-482-7171, for staking the location of the existing cable lines. The Contractor will be responsible for any damages that occur during the course of his excavation to any of the Cable Company utilities.

PART 5 – PROJECT SPECIAL SPECIFICATIONS

NOTICE:

City of Muskegon Standards for Materials and Construction pertaining to pavement, watermain, sanitary and storm sewer construction may be all, partially or not included in this document; they are however, to be considered in full force and effect.

5.0 PROJECT SPECIAL SPECIFICATIONS

5.0.1 CONTRACT COORDINATION - The Contractor may be required to coordinate this contract work with other projects which may be in progress at the same time.

5.0.2 GOVERNING ORDER - The Technical Specifications, which include the City of Muskegon Standard Specifications for construction and materials shall govern the construction of this project except as modified by these Special Specifications.

5.0.3 CITY'S RIGHT TO REDUCE OR INCREASE QUANTITIES - Reference is made to Part 3, Section 1, General Specifications which gives the City the right to increase or decrease the total contract price 25% without penalty.

5.0.4 PERMISSION TO CONSTRUCT - The Contractor shall obtain written or verbal permission from the Engineer or Project Inspector before proceeding with construction of any of the following items:

a. Concrete Curb and Gutter
b. Trench Repair
c. Base Course
d. Leveling Course
e. Wearing Course
f. Concrete Pavement
g. Concrete Walk
h. Drive Approach

Permission will be granted upon confirmation that all necessary labor, equipment and material are on the site, and the area is properly prepared.

5.0.5 LETTERS OF RECOMMENDATION IN LIEU OF PERFORMANCE BOND - In accordance with Section 1, four letters of sincere recommendation may be presented to the City Manager in lieu of a performance bond when this Contract is under the amount of $50,000 and the successful Bidder cannot produce the appropriate performance bond. To use letters of recommendation for this purpose, your intention to do so must be disclosed as part of your bid, so that a decision on acceptability can be made prior to the contract award.

5.0.6 SALVAGE MATERIALS - The Contractor shall become the owner of all salvaged cast iron, brass and lead products, including manhole and catch basin castings, goosenecks, stops, corporations, valve boxes, valves, and hydrants. Determination of the disposal site and disposal of the salvaged material is the responsibility of the Contractor. No payment shall be made for salvage disposal.

5.0.7 LIQUIDATED DAMAGES; TIME OF THE ESSENCE – The work is to be completed on the specified completion date, and completed, ready for final payment within 30 days after receiving the "Punch List".

The parties recognize that time is of the essence of this agreement, and that the City will suffer financial loss and be entitled to damages in the event it is not completed within the time stated above, and further if partial performance is not completed within the times provided for partial performance, if a schedule is attached to this agreement or included herein. The parties also recognize the delays, expense, and difficulties involved in proving actual losses suffered by the CITY if the work is not completed on time. Accordingly, instead of requiring any such proof the CITY and the CONTRACTOR agree that as liquidated damages for delay, (but not as a penalty) the CONTRACTOR shall pay the CITY Three Hundred Dollars ($300.00) for each day that expires after the time specified for substantial completion set forth above, and the same amount for each day that expires after failure to complete partial performance if set forth in a schedule adopted in this contract. After substantial completion if the CONTRACTOR shall neglect, refuse, or fail to complete the remaining work within the time specified above for completion and readiness for final payment or any proper extension thereof granted by the CITY, the CONTRACTOR shall pay the CITY Three Hundred Dollars ($ 300.00) for each day that expires after the time above specified for completion and readiness for final payment.

Only delays caused by labor disputes, fire, natural catastrophe or acts of God shall excuse the CONTRACTOR from the above payments. When the effects of such interruptions have ceased, in the reasonable opinion of the CITY, the said time limits shall be adjusted only for the period of delay caused thereby, and shall remain in effect as adjusted.

The foregoing provisions for liquidated damages shall, however, be in addition to and not in substitution for any other rights or remedies which the CITY may have under this agreement or otherwise against the CONTRACTOR by reason of its failure to complete construction within the time and in the manner required by this agreement.

5.0.8 DEFECTIVE MATERIALS AND WORK - All materials which do not meet the requirements of the specifications at the times they are to be used shall be rejected, unless otherwise authorized as acceptable by the Engineer.

Any completed work that may be found to be defective before the final acceptance of the completed work shall be corrected and replaced immediately in conformance with the Specifications.

The Contractor shall be responsible for any and all damages that the work may sustain prior to its acceptance, and shall rebuild, repair, restore and make good at his own expense, all injuries and damages to any portion of the work by the action of the elements or from any cause whatsoever prior to its acceptance.

5.0.9 CORRECTING WORK - Any unfaithful work or imperfect work or material that may be discovered before the final acceptance of the work shall be corrected and replaced immediately on the order of the Engineer. In case any material is rejected, it shall be immediately removed from the line of work and not again brought thereon. In case the order for removal and replacing as specified above is not promptly complied with after written notice, the Engineer shall be at liberty to remove and replace the same with proper materials, at the expense of the Contractor, and the cost thereof shall be deducted from the amount due him. Any omission to disapprove the work or material at the time of inspection or at the time of any estimate shall not relieve the Contractor of any of his obligations. All work or material of whatever kind which, during the progress of construction and before its final acceptance, may become damaged shall be removed and replaced by the Contractor with good and satisfactory work and material.

5.0.10 RETENTION OF IMPERFECT WORK - If any portion of the work done or material furnished under this Contract shall prove defective and not in accordance with the Contract Documents, and if the imperfection in the same shall not be of sufficient magnitude or importance to make the work unacceptable or impracticable, or will not create conditions which are dangerous or undesirable, the Engineer shall have the right and authority to retain such work instead of requiring the imperfect work to be removed and reconstructed but he shall make deductions therefor in the payments due the Contractor as may be just and reasonable.

5.0.11 ACCIDENT PREVENTION AND SAFETY - The Contractor shall comply with all Federal, State, and local laws and regulations governing the furnishing and use of all safeguards, safety devices, and protective equipment. He shall also take any other needed actions on his own responsibility or as directed by the Engineer as are reasonably necessary to protect the life and health of employees on the job, the safety of the public, and to protect property during the construction of the project.

Recommendation of the current Manual of Accident Prevention in Construction, issued by the Associated General Contractors of America, Inc., shall be used for guidance in specific situations which are not covered by Federal, State, or local laws or regulations.

Special provisions in polluted areas. The Contractor shall be responsible for determining whether work in all locations involved in this contract is subject to a governmentally required health and safety plan to protect workers and others from the effects of hazardous materials in proximity of the work, in the ground or water resources involved. In the event such a health and safety plan is required, the Contractor shall familiarize itself completely with the plan and comply with all its requirements.

In the event there is no health and safety plan for hazardous materials, but the Contractor reasonably should recognize that a health and safety plan is warranted, it shall be the Contractor's responsibility to notify the city before commencing work to obtain or produce, as city may require, a health and safety plan and implement it.

5.0.12 CONFINED SPACES - The Contractor shall have a Confined Space Policy and shall use all safeguards, safety devices and protective equipment necessary to comply with the current Federal, State and Local laws and requirements for practices and procedures for protection from the hazards of entry into confined spaces. Also, the Contractor shall make available all necessary tools, equipment and/or man power for city personnel entering confined spaces to inspect the work performed or being performed by the Contractor. In the event Contractor determines that confined spaces exist in the project, it shall notify in writing, before commencing work, the location and existence of all confined places, providing sufficient documentation for city emergency personnel to respond to any and all situations requiring entry into or dealing with confined spaces.

5.0.13 SUNDAY AND NIGHT WORK - Ordinarily, no Sunday or night work shall be carried on which will require the presence of the Engineer or an inspector, except with the written permission of the Engineer. Sunday and night work is permissible in an emergency to the extent required to meet the emergency, but the Contractor shall notify the Engineer, as far in advance as possible, of his intention to carry on such emergency work and of the time and place of doing it.

5.0.14 BID TABULATION SHEET - The Bid Tabulation Sheet in these contract documents was created in Microsoft Excel. Any Contractor who would like to use this spreadsheet in preparing a bid may obtain an electronic copy from the Engineering Office by calling the Engineering Department at (231)-724-6707.

5.0.15 PUBLIC ACT NO. 57 OF 1998, SECTION 2 - A contract between a contractor and a governmental entity for an improvement that exceeds $75,000.00 shall contain all of the following provisions:

a. That if a contractor discovers 1 or both of the following physical conditions of the surface or subsurface at the improvement site, before disturbing the physical condition, the contractor shall promptly notify the governmental entity of the physical condition in writing:

    i. A subsurface or a latent physical condition at the site if differing materially from those indicated in the improvement contract.

    ii. An unknown physical condition at the site is of an unusual nature differing materially from those ordinarily encountered and generally recognized as inhering in work of the character provided for in the improvement contract.

b. That if the governmental entity receives a notice under subdivision (a), the governmental entity shall promptly investigate the physical condition.

c. That if the governmental entity determines that the physical conditions do materially differ and will cause an increase or decrease in costs or additional time needed to perform the contract, the governmental entity's determination shall be made in writing and an equitable adjustment shall be made and the contract modified in writing accordingly.

d. That the contractor cannot make a claim for additional costs or time because of a physical condition unless the contractor has complied with the notice requirements of subdivision (a). The governmental entity may extend the time required for notice under subdivision (a).

e. That the contractor cannot make a claim for an adjustment under the contract after the contractor has received the final payment under the contract.

5.0.16 LOCAL PREFERENCE POLICY

a. Purpose - To establish parameters in order for the City Commission to give local preference consideration for city contracts and purchase

b. Local Preference Policy - The City Commission may give local preference on purchases and contracts to local businesses when the lowest local business bid/price is within 1% or less of the lowest non-local bid. In cases where the total cost is expected to exceed $1 million, the City Commission will be consulted on whether local preference may apply, prior to soliciting bids. Additionally, for the purposes of this policy, "local" shall mean a business location in the City of Muskegon.

5.0.17 TERRACE GRADING - This work shall consist of removing all delirious material, excavating 3 inches below finish grade and disposal of this material, and furnishing and placing of approved top soil. The top soil shall be struck off on a line between the top of curb and the outside edge of sidewalk, if no sidewalk exists, the grade line shall be as directed by the Engineer. Class A Seed, Fertilizer and Mulch as shown on the construction plans or in the special specifications shall be placed at the rate specified. Terrace grading will be paid for per lineal foot, measured along the center of the street and shall include all of the above work.

5.0.18 SODDING, SEEDING, TOP SOIL, FERTILIZER AND MULCH

a. Description - This work shall consist of furnishing and placing Sod, Seed, Top Soil, Fertilizer and Mulch as shown on the construction plans or in the special specifications and shall be placed at the rate specified. Payment shall be at the unit price described in the proposal and shall represent payment in full for all of the work complete.

b. Materials - All Material, shown on the construction plans or in the proposal, Unless Specified Otherwise, Shall conform to the most Current Michigan Department of Transportation Standard Specifications for Construction or subsequent revision thereof.

c. Construction Methods - Unless Specified Otherwise, All Construction Methods Shall conform to the most Current Michigan Department of Transportation Standard Specifications for Construction or subsequent revision thereof.

d. Basis of Payment - Payment shall be at the unit price described in the proposal and shall represent payment in full for all of the work for each unit complete.

5.0.19 HYDROSEEDING - This work may be done in place of seeding and in accordance with the most Current Michigan Department of Transportation Standard Specifications for Construction or subsequent revision thereof.

The Contractor shall use care spraying around signs, drives, sidewalk, and personal property. Excess material shall be rinsed promptly from these areas with clear water. Application rates shall be the same as conventional methods: Class A seeding - 220# per acre, Hydromulch - per manufacturer, Adhesive - per manufacturer, Fertilizer - 228# per acre, and water as necessary.

Payment shall be at the unit price bid per square yard and shall include all of the above and other work needed to place the hydroseeding. No other payment will be allowed.

5.0.20 TRAFFIC CONTROL - Traffic Control shall be in accordance with the "Michigan Manual on Uniform Traffic Control Devices" and shall be the responsibility of the Contractor to provide, place and maintain signs, barricades and lights for the closing of the street as directed by the Engineer for the entire period of construction.

Type III barricades and signs shall be placed at all intersections leading to the construction site, as well as the site itself, in accordance with the plans for Traffic Control . The Contractor shall review barricade and sign placement with the Engineer for conformance approval.

As part of the Traffic Control Item, It shall be the responsibility of the contractor to make every reasonable attempt possible to maintain traffic during the construction period. While it may be impossible at times to permit traffic around the work zone it will be the responsibility of the contractor to keep the actual work zone to a minimum. Should it be necessary to close a portion of the street the contractor must maintain a level of coordination with the residence so that they do not unknowingly become stranded, The contractor shall devise a

plan to meet the ingress / egress needs of the residence. In no instance shall the roadway be inaccessible while no work is being performed.

All costs incurred in maintaining traffic are to be considered part of the Traffic Control pay item. No additional payments will be made for the maintenance of traffic. Payment for Traffic Control shall be by the unit and rate as described in the proposal. No other payments shall be made.

5.0.21 SAW CUTS - The Contractor shall saw cut all meets relative to sidewalk, driveway, or pavement construction unless waived by the Engineer. No payment shall be allowed for Saw Cutting unless specified in the proposal.

5.0.22 SOIL DENSITY - When soil density is specified, the Contractor shall deposit the backfill or fill in layers not to exceed 12" in depth, loose measure parallel to the finished grade for the full width of area to be filled. Each layer shall be compacted by the use of suitable equipment to a minimum of 95% of the maximum unit weight unless otherwise specified. The maximum unit weight will be determined by the current method of testing for the compaction and density of soil, MDOT approved methods. The Contractor shall provide all labor and equipment necessary to prepare the site or location for density testing. The City of Muskegon will provide personnel and testing equipment and will conduct the density testing at specified locations, and will conduct one retest on failed sections at no cost to the Contractor. When additional testing is required, due to inadequate compaction, the Contractor will be charged for time, materials, equipment and all incidental costs involved. No payment shall be allowed for trench or sub grade density.

5.0.23 ADJUSTING SMALL CASTINGS - Whenever small castings are encountered outside the paved area they shall be adjusted at no cost to the City unless stipulated within the proposal. Castings for stop boxes, meter pits, and water valves are included in the scope of this item. If the existing materials are deficient they shall be replaced by the City at no cost to the Contractor under the same provisions as defined in Stock Room Materials.

5.0.24 TRENCH REPAIR - VARIOUS TYPES

a. General Information - for all types.

    i. Removing Existing Pavement: The Contractor shall remove the existing pavement to a sufficient width to eliminate undermining of adjacent paved areas and to provide safe, adequate working conditions.

    ii. Saw Cutting Trench Perimeters: The Contractor shall saw cut, using straight lines, parallel with the trench center line or as directed by the Engineer.

b. Secondary Trench Rehabilitation:

    i. Trenches that extend beyond the principal trench saw cut edge, and are caused by the installation of lateral mains, connections or hydrant installations shall be paid by the lineal foot method, measured on the trench center line, beginning at the edge of the principal trench, in accordance with the pavement type defined in the proposal.

c. Local Street - Type I to include:

    i. Remove existing pavement including curbs and gutters.
    ii. Saw cut trench perimeters.
    iii. Place Concrete Pavement, 6" thick with curbs and gutters as existing. Extra strength concrete as proposal designated.

d. Local Street - Type II to include:

    i. Remove existing pavement including curbs.
    ii. Saw cut trench perimeters.

iii. Place Concrete Base Course, 6" thick, with curbs. Extra strength concrete as proposal designated.
iv. Place Bituminous Surface Mixture, @ 165# per square yard.

e. Local Street - Type III to include:

i. Remove existing pavement, including curbs and gutters.
ii. Saw cut trench perimeters.
iii. Place 22A Aggregate Base Course, 6" thick.
iv. Place Curb and Gutter per existing.
v. Place Bituminous Leveling Mixture @ 165# per square yard.
vi. Place Bituminous Bond Coat @ 0.05 Gal. per square yard.
vii. Place Bituminous Top Mixture @ 165# per square yard.

f. Local Street - Type IV to include:

i. Remove existing pavement, including curbs and gutters.
ii. Saw cut trench perimeters.
iii. Place Curb and Gutter per existing.
iv. Place Bituminous Base Mixture @ 440# per square yard in two lifts.
v. Place Bituminous Bond Coat @ 0.05 Gal. per square yard.
vi. Place Bituminous Top Mixture @ 165# per square yard.

g. Local Street - Type V to include:

i. Place 22A Aggregate Base Course, 6" thick.

h. Major Street - Type I to include:

i. Remove existing pavement, including curbs and gutters.
ii. Saw cut trench perimeters.
iii. Place Concrete Pavement, 8" thick, including curb and gutter. Extra strength concrete as proposal designated.

i. Major Street - Type II to include:

i. Remove existing pavement, including curbs and gutters.
ii. Saw cut trench perimeters.
iii. Place Concrete Base Course, 8" thick, including curb and gutter. Extra strength concrete as proposal designated.
iv. Place Bituminous Bond Coat @ 0.05 Gal. per square yard.
v. Place Bituminous Top Mixture @ 220# per square yard.

j. Major Street - Type III to include:

i. Remove existing pavement, including curbs and gutters.
ii. Saw cut trench perimeters.
iii. Place Curb and Gutter per existing.
iv. Place Aggregate Base Course (22A), 8" thick.
v. Place Bituminous Leveling Mixture @ 165# per square yard.
vi. Place Bituminous Bond Coat @ 0.05 Gal. per square yard.
vii. Place Bituminous Top Mixture @ 220# per square yard.

k. Major Street - Type IV to include:

i. Remove existing pavement, including curbs and gutters.

ii. Saw cut trench perimeters.
iii. Place Curb and Gutter per existing.
iv. Place Bituminous Base Mixture @ 660# per square yard in two lifts.
v. Place Bituminous Bond Coat @ 0.05 Gal. per square yard.
vi. Place Bituminous Top Mixture @ 220# per square yard.

l. State Trunk Lines - No cost differentials shall be in effect for the various types of materials used on State Trunk Lines. The Contractor shall replace pavement to the same section as found and shall conduct his work to conform to the Michigan Department of Transportation permit authorizing work in State right of ways. Concrete materials shall be 9 sack minimum.

m. Lawn Rehabilitation, Sod to include:

i. Place Prepared Soil, 3" thick.
ii. Place Seed or Sod, Class "A" or "B", as proposal designated.

n. Lawn Rehabilitation, Seed to include:

i. Prepared Top Soil, 3" thick.
ii. Mulch - 2 Ton per acre.
iii. Water as necessary.
2. Class "A" Seeding - 100# per acre.
4. Fertilizer - 240# per acre.

o. The Contractor may hydroseed (using the same application rates as above), with the approval of the Engineer. Payment shall be by the lineal foot as measured along the centerline of the trench.

p. Concrete Sidewalk to include:

i. Remove existing sidewalk.
ii. Saw cut trench perimeters.
iii. Place Concrete Sidewalk per existing.

q. Trench Repair - Special to include:

i. Prepared Soil, 3" thick.
ii. Concrete Curb as required.
iii. Concrete Sidewalk.
Sod, Class "A".
Concrete Drive Approach.
Gravel Shoulder, 6" thick.

iv. All other disturbed structures or areas shall be rehabilitated to the original condition.

v. Payment for Trench Repair - Special shall be by the lineal foot, measured on the pipeline centerline, as described in the proposal. Payment shall be in full for all of the above items.

r. Trench Repair - Payment

i. Payment for Trench Repair, as described in the proposal, shall be payment in full for all work described under the above various types. Lineal Foot measurements shall be measured on the center line of pipe installation. No other payment shall be made.

5.0.25 SOIL EROSION CONTROL - The contractor shall install and maintain all soil erosion and sedimentation (SESC) controls, as indicated on the plans or as directed by the Engineer, to prevent soil from entering storm drains, surface waters and areas beyond project limits.

a. Catch Basin Protection - Catch basin inlet protection drops (Silt Sacks with Overflow Capability) shall be installed in all new and existing basins. Geotextile fabric covers or wraps are not allowed.

b. Silt Fence - Silt fence shall be trenched in as required. Clean fence when soil reaches 50% of fence height.

c. Soil Removal - Remove soil tracked onto paved public roads on a daily basis. Vacuum methods are preferred, but sweeping is acceptable if material is returned to a suitable location.

d. Inspection - Inspect all controls measures on a weekly basis or after each rainfall event. Clean, replace or repair as necessary, to ensure proper function.

e. Temporary Soil Control Duration - All temporary control measures shall remain in place until all disturbed areas are adequately stabilized.

Payment - All costs for SESC controls, except for the catch basin inlet protection drops, shall be included in the excavation pay item, unless noted otherwise. No other payment shall be made unless authorized by the Enginee

5.1 FOR ALL PAY ITEMS

All pay items shall be constructed as specified in the Michigan Department of Transportation 2012 Standard Specifications for Construction, Michigan Department of Transportation Standard Plans, and the City of Muskegon Standard Specifications for Watermain except where modified in these Special Specifications. Materials for all pay items shall meet the specifications as specified in the Michigan Department of Transportation 2012 Standard Specifications for Construction, Michigan Department of Transportation Standard Plans, and The City of Muskegon Standard Specifications for Watermain except where modified in these Special Specifications.

5.2 PROGRESS CLAUSE

The Project shall not start until May 1, 2018 and not until after receiving the Notice to Proceed. The Contractor shall not start work before date designated as the starting date in the detailed Progress Schedule approved by the Engineer. In no case shall any work be commenced prior to receipt of formal Notice to Proceed from the City of Muskegon.

The entire project shall be completed including final site restoration, pavement markings and clean-up on or before July 31, 2018.

Failure by the Contractor to meet the above requirements and dates will result in the Contractor being assessed liquidated damages in accordance with section 108.10 of the 2012 Standard Specifications for Construction. Liquidated damages will continue to be assessed for each calendar day or portion of the day that this work remains incomplete even if these days extend beyond the typical seasonal shut-down date of November 14th.

The confirmed low bidder shall submit a detailed "Progress Schedule", (MDOT Form 1130 may be used), to the Project Engineer at the preconstruction meeting. After receiving, reviewing and approving the completed Progress Schedule, the Project Engineer shall sign and forward the approved Progress Schedule to the Contractor.

Lack of a timely submittal and approval of the Progress Schedule by the Contractor, will result in the Project Engineer delaying contract award per subsection 102.15 of the 2012 MDOT Standard Specifications for Construction.

The Progress Schedule shall include, as a minimum, the controlling work items for the completion of the project and the planned dates that these work items will be controlling operations. When specified in the Bidding Proposal, the date the project is to be opened to traffic, as well as the final project completion date, shall also be included in the Progress Schedule.

If the Bidding Proposal specifies other controlling dates, these shall also be included in the Progress Schedule.

Failure on the part of the Contractor to carry out the provisions of the Progress Schedule, as established, may be considered sufficient cause to prevent bidding future projects until a satisfactory rate of progress is again established.

The starting date, contract time, or completion date for this project may be adjusted by the City of Muskegon without imposing liquidated damages upon the receipt of satisfactory documented evidence that unforeseen delays have occurred. The procedure for Progress Schedule, Contract Time Extensions, and Liquidated Damages will be pursuant to Section 108 of the MDOT 2012 Standard Specifications for Construction

5.3 MAINTAINING TRAFFIC

5.3.1 GENERAL - This work shall be in accordance with the requirements of the 2012 Standard Specifications for Construction and as herein specified. The Contractor is advised that the 2011 Michigan Manual of Uniform Traffic Control Devices is hereby established as governing all work in connection with traffic control devices, barricade lighting, etc., required for this project.

Walks, driveways, and entrances to buildings shall not be unnecessarily blocked. Vehicular access shall be maintained to all properties designated by the Engineer. Protection for and protection of pedestrian traffic shall be maintained at all times.

Street name signs and stop signs in the way of construction will be removed and reset immediately in a temporary location. These signs shall finally be set by the Contractor in a location designated by the Engineer upon completion of final grading in the section involved. This work shall be included in payment for Minor Traffic Devices.

5.3.2 SPECIFIC REQUIREMENTS - Traffic control devices shall be placed as shown on sheet 5 of the construction plans.

During construction, the contractor will be required to maintain access to businesses, residents, and keep First St., Clay Ave., Jefferson St. and Western Ave. open to traffic.

The work of abandoning water services in Clay Ave. shall be completed within one week after commencing this work. The concrete pavement will be completed and traffic control devices shall be removed in no more than one week.

5.3.3 TRAFFIC CONTROL DEVICES - All traffic control devices and their usage shall conform to the Michigan Manual of Uniform Traffic Control Devices (MMUTCD), 2011 edition as revised, and as specified herein.

During non-working periods, any work site with uncompleted work shall have advance
Signs (W21-4 "Construction Ahead") and plastic drums, at specific locations, as directed by the Engineer, at no additional cost to the department.

At the completion of each day's work the contractor shall make sure that all property owners have access to their residences. The contractor shall also ensure that access for emergency vehicles is maintained on First St., Clay Ave., Jefferson St. and Western Ave.

5.3.4 CONSTRUCTION INFLUENCE AREA (CIA) - The CIA shall include the right-of -way of the following roadways, within the approximate limits described below:

First St. from Clay to Western, Clay Ave. from First to Jefferson, and Jefferson St. from Clay Ave. To Western.

5.3.5 TRAFFIC RESTRICTIONS - All work shall be conducted during daytime hours only. Night time work may be permitted, at the discretion of the Engineer, however, any additional cost for maintaining traffic and lighting shall be the responsibility of the Contractor.

5.3.6 HOLIDAY WORK RESTRICTIONS - No work shall be performed during the following holiday periods, or as directed by the Engineer.

Memorial Day 2017
Starting Friday, May 26, 2017 at 3:00 PM through Tuesday, May 30, 2017 at 7:00 AM .

4th of July 2017
Starting Friday, June 30, 2017 at 3:00 PM through Wednesday, July 5, 2017 at 7:00 AM.

Labor Day 2017
Starting Friday, September 1, 2017 at 3:00 PM through Tuesday, September 5, 2017 At 7:00 AM.

5.3.7 TEMPORARY SIGNS - Construction signing for this project shall be as shown on plan sheet 5, distances shown between construction warning, regulatory and guide signs are shown approximate and may require field adjustment as directed by the Engineer.

5.3.8 MEASUREMENT AND PAYMENT - Separate pay items are provided in the contract to compensate for Maintaining Traffic. All other costs due to Maintaining Traffic are to be included with Minor Traffic Devices.

Any additional signing or maintaining traffic devices required to expedite the construction shall be at the Contractor's expense.

5.4 UTILITY COORDINATION

The contractor shall cooperate and coordinate construction activities with the owners of utilities as stated in Section 104.08 of the 2012 MDOT Standard Specifications for Construction. In addition, for the protection of underground utilities, the contractor shall follow the requirements in section 107.12 of the 2012 MDOT Standard Specifications for Construction. Contractor delay claims, resulting from a utility, will be determined based upon Section 108.09 of the 2012 MDOT Standard Specifications for Construction.

5.4.1 PUBLIC UTILITIES - The following Public Utilities have facilities located in the Right-of-Way:

Consumers Energy – Michelle Peterson
700 E Sternberg Road
Norton Shores Mi, 49441
phone: (231) 332-2621

Frontier Communications. – David B. Flermoen
860 Terrace Street
Muskegon, Michigan 49440
phone: (231) 727-1319

DTE Energy – Vincent Duca
2359 Olthoff Drive
Muskegon, Michigan 49444
phone: (231) 578-0488

Comcast – Jim Stitzel
700 W. Broadway Avenue
Muskegon Heights Mi 49444
phone: (810) 217-1642

City of Muskegon Department of Public Works & Utilities
Dave Baker
1350 E. Keating Avenue
Muskegon, Michigan 49442
phone: (231) 724-4100

Western Tel-Com, Inc.
Eric Merrifield
(For Muskegon Area Intermediate School District)
A-4273 Blue Star Highway P.O. Box 1317
Holland, Michigan 49422
phone: (616) 393-0138 ext. 125

On all Projects: **"three working days before you dig - Call Miss Dig - Toll Free"....811**.The owners of existing service facilities that are within grading or structure limits will move them to locations designated by the Engineer or will remove them entirely from the highway Right-of-Way. Owners of Public Utilities will not be required by the County/City to move additional poles or structures in order to facilitate the operation of construction equipment unless it is determined by the Engineer that such poles or structures constitute a hazard to the public or are extraordinarily dangerous to the contractor's operations.

5.4.2 UTILITY COORDINATION CLAUSE - All utilities, both public and private, have been informed of the work proposed for Laketon Ave., and each have given assurances that every effort will be made not to hold up or interfere with the Prime or Sub-Contractors in executing their responsibilities. Listed below, for each utility, is a description of work each has to accomplish, with estimated time involved and scheduling. In some cases, as noted, the utility construction sequence has to be coordinated with the Prime Contractor.

Consumers Energy - has 2 castings to adjust, 1 transformer to remove, and 1 box to relocate.

Frontier Communications - 1 pole to relocate, 2 castings to adjust, and one hand hole to adjust.

DTE Energy - has no work to perform.

Comcast - has service on Consumers Energy and Frontier Communication poles to be relocated.

City of Muskegon Department of Public Works and Utilities - has no work to perform.

5.5 HEDGE REMOVAL

5.5.1 DESCRIPTION - The work covered by this special provision shall be in accordance with Section 202 of the MDOT 2012 Standard Specifications for Construction

5.5.2 CONSTRUCTION METHODS - The work covered by this special provision shall be in accordance with the applicable requirements in Section 202 except for the following: The hedge at the west corner of Clay Ave and Jefferson St. including roots shall be removed. Included in the payment for Hedge, Rem will be 7 wood post imbedded in the existing Hedge.

5.5.3 MEASUREMENT AND PAYMENT - The completed work, Hedge, Rem Including, all materials, labor and equipment as measured will be paid for at the contract unit price, for the following contract item (pay item).

PAY ITEM	PAY UNIT
Hedge Removal	Foot

5.6 DR STRUCTURE, REM, MODIFIED

5.6.1 DESCRIPTION - The work covered by this special provision shall be in accordance with Section 203 of the MDOT 2012 Standard Specifications for Construction

5.6.2 CONSTRUCTION METHODS - The work covered by this special provision shall be in accordance with the applicable requirements in Section 203 except for the following: All manholes, catch basins, including water valve manholes, shall be removed in full including footings.

No masonry from the structure will be allowed to be buried in the pavement area.

5.6.3 MEASUREMENT AND PAYMENT - The completed work, Dr. Structure, Rem, Modified Including, all materials, labor and equipment as measured will be paid for at the contract unit price, for the following contract item (pay item).

PAY ITEM	PAY UNIT
DR STRUCTURE, REM, MODIFIED	Each

5.7 PAVT, REM, MODIFIED

5.7.1 DESCRIPTION - The work covered by this special provision shall be in accordance with Sections 204 of the MDOT 2012 Standard Specifications for Construction

5.7.2 CONSTRUCTION METHODS - The work covered by this special provision shall be in accordance with the applicable requirements in Section 204 of the MDOT 2012 Standard Specifications for Construction, except for the following: The existing HMA pavement is approximately three inches thick. In addition there are several small areas of concrete pavement that is approximately six inches thick. The Contractor is responsible for verification of this data before submitting his bid for this item.

5.7.3 MEASUREMENT AND PAYMENT - Only one (1) pavement removal item will be considered, regardless of pavement thickness or materials. Payment for pavement being removed will be classified as **Pavt, Rem, Modified.** Payment for removing curb and gutter will be paid for separately as **Curb and Gutter, Rem**. The completed work, Pavt, Rem, Modified including all materials, labor and equipment as measured will be paid for at the contract unit price for the following contract item (pay item):

PAY ITEM	PAY UNIT
PAVT, REM, MODIFIED	Square Yard

5.8 DRIVEWAY, NONREIF CONC, ‘ ’ INCH MODIFIED

5.8.1 DESCRIPTION - The work covered by this special provision shall be in accordance with Section 801 of the MDOT 2012 Standard Specifications for Construction except where modified herein.

5.8.2 MATERIALS - The materials shall meet the requirements specified in Sections 901, 902 and 903 of the MDOT 2012 Standard Specifications for Construction.

5.8.3 CONSTRUCTION METHODS - The work covered by this special provision shall be in accordance with the applicable requirements in Section 801 except for the following: The Contractor shall construct the Driveway, Nonreinf Conc, ‘_’ inch, Modified per plan details on plan sheet number 2.

5.8.4 MEASUREMENT AND PAYMENT - The completed work, Driveway, Nonreif Conc, __ inch, Modified including all materials, labor and equipment, as measured will be paid for at the contract unit price for the following contract item (pay item).

PAY ITEM	PAY UNIT
DRIVEWAY, NONREINF CONC, 6 INCH, MODIFIED	Square Yard

5.9 PAVT MRKG, WATERBORNE, 4 INCH, BLUE AND PAVT MRKG, WATERBORNE, HANDICAP, SYM, BLUE

5.9.1 DESCRIPTION - The work covered by this special provision shall be in accordance with Section 811 of the MDOT 2012 Standard Specifications for Construction except where modified herein.

5.9.2 MATERIALS - The materials shall meet the requirements specified in Sections 920 of the MDOT 2012 Standard Specifications for Construction, except the color will be Blue.

5.9.3 CONSTRUCTION METHODS - The work covered by this special provision shall be in accordance with the applicable requirements in Section 811 except the color will be Blue.

5.9.4 MEASUREMENT AND PAYMENT - The completed work, Pavt Mrkg, Waterborne, 4 inch, Blue and Pavt Mrkg, Waterborne, Handicap, Sym, Blue including all materials, labor and equipment, as measured will be paid for at the contract unit price for the following contract item (pay item).

PAY ITEM	PAY UNIT
PAVT MRKG, WATERBORNE, 4 INCH, BLUE	Foot
PAVT MRKG, WATERBORNE, HANDICAP, SYM, BLUE	Each

5.10 HYDROSEEDING

5.10.1 DESCRIPTION - The work covered by this special provision shall be in accordance with Section 816 of the MDOT 2012 Standard Specifications for Construction.

5.10.2 MATERIALS - The materials shall meet the requirements specified in Section 816.

5.10.3 CONSTRUCTION METHODS - The work covered by this special provision shall be in accordance with the applicable requirements in Section 816 except for the following:

This work shall consist of placing the seed by hydraulic means.

The Class TUF seed, mulch, adhesive, and fertilizer shall be mixed in a solution of water and sprayed evenly over the ground area covered.

The Contractor shall use care spraying around signs, drives, sidewalk, and personal property. Excess material shall be rinsed promptly from these areas with clear water.

Application rates shall be the same as conventional methods:

Seeding - Class TUF seeding @ 220#/acre
Hydromulch - per manufacturer
Adhesive - per manufacturer
Fertilizer - Class A @ 228#/acre
Water - as necessary.

5.10.4 MEASUREMENT AND PAYMENT - The completed work, Hydroseeding including all materials, labor and equipment, as measured will be paid for at the contract unit price for the following contract item (pay item).

PAY ITEM	PAY UNIT
HYDROSEEDING	Square Yard

5.11 FLOWABLE FILL NON-STRUCTURAL

5.11.1 DESCRIPTION - This work shall consist of furnishing and placing a non-structural flowable fill for the abandonment of sewers as called for on the plans or as determined by the Engineer. This work shall be done in accordance with the MDOT 2012 Standard Specifications for Construction, and as modified herein.

5.11.2 MATERIALS - Flowable Fill shall consist of Type 1 Portland cement, granular material (2NS), fly ash and water mixture to be utilized as a controlled density fill.

Use either Type I or IA Portland cement conforming to Section 901 of the 2012 MDOT Standard Specifications for Construction and Class F or C fly ash as specified by ASTM C 616 except there is no limit on loss on ignition.

Produce a mix of cement, fly ash, 2NS and water in the following proportions.

Portland Cement 50 lb/cyd
Fly Ash 500 lb/cyd
2NS Sand 2850 lb/cyd
Water approx. 276 lb/cyd (sufficient water to produce desired flowability).

5.11.3 CONSTRUCTION - Secure ends of pipes with bulkheads. Secure all pipes with backfill to counteract the buoyant effect of flowable fill. Provide a method, approved by the Engineer, to void air at the lower end of abandoned pipe and for confirming flowable fill has completely filled the length of pipe being abandoned.

5.11.4 TRANSPORTING - The temperature of the flowable fill mix as it is manufactured and delivered shall be at least 50 degrees F and transported to the point of placement in a revolving drum mixer or agitator.

5.11.5 MEASUREMENT AND PAYMENT - Payment for this work will be by the cubic yard. Volume will be calculated and compared to delivery tickets. Payment for delivered volumes exceeding calculated volume will only be paid to 5% over. 1.05 times the calculated volume is maximum payment for this item. Volumes less than calculated volumes will be paid at the lesser amount.

PAY ITEM	PAY UNIT
FLOWABLE FILL, NON STRUCTURAL	Cubic Yard

5.12 DECORATIVE CONCRETE

5.12.1 DESCRIPTION - This work shall consist of the labor and materials required to stamp and/or color concrete sidewalks, sidewalk ramps, and concrete pavements as shown on the plans or as directed by the Engineer. This work shall be in accordance with Sections 205, 302, 601,602 & 905 of the 2003 MDOT Standard Specifications for Construction and this Special Provision. This work shall follow industry standards and shall conform to the details shown in the plans.

The Contractor shall possess satisfactory experience with the specified method of stamping and coloring concrete. The Contractor shall demonstrate a minimum of 1000 square yards of laydown experience. A list shall be provided to the Engineer at the pre-construction meeting of project locations with the reference person of the owner for whom the representative work was performed. The list shall demonstrate the required minimum laydown amount of 1000 square yards.

5.12.2 MATERIALS - The materials shall meet the following requirements:

Sound Earth	205
Granular Material Class II	902
Joint Fillers	914
Lane Ties	914
Steel Reinforcement.	905

A. CONCRETE & REINFORCEMENT - Concrete shall be Grade P2 as specified in Section 601 of the Standard Specifications for Construction. The coarse aggregate shall be Michigan Series 6AA quarried limestone gradation as specified in Section 902 of the 2003 MDOT Standard Specifications for Construction. Concrete and Reinforcement shall also comply with all provisions of the following standards, City of Muskegon, Concrete Pavement:

   1. American Concrete Institute (ACI) 301, "Specification for Structural Concrete for Buildings."

   2. ACI 318, "Building Code Requirements for Reinforced Concrete."

   3. ACI 330, "Guide for Design and Construction of Concrete Parking Lots."

   4. Concrete Reinforcing Steel Institute (CRSI) "Manual of Standard Practice."

   All coarse aggregate used in the concrete mixture shall be from the same MDOT approved source. All fine aggregate used in the concrete mixture shall be from the same MDOT approved source.

B. CONCRETE ADMIXTURES - Concrete accelerating admixtures, water-reducing admixtures, and retarding admixtures shall meet the requirements of Section 903 of the Standard Specifications for Construction. Admixtures containing calcium chloride are not permitted.

C. INTEGRAL COLOR - The design is based on the following integral colors:

   1. "Brick Red" Integral Color No. 529 with Color Hardener with Terra Cotta Highlight by lncrete Systems for all areas (pavement and sidewalk) to be stamped with used brick pattern. Release agent shall be dark gray color.

2. "Sandstone" Integral Color No. 5275 with Color Hardener Sandstone Highlight by lncrete Systems for non-stamped decorative concrete (pavement and sidewalk) and detectable warning strips at sidewalk ramps.

3. "Autumn Brown" with Color Hardener Autumn Brown Highlight by lncrete Systems for pavement areas as indicated.

Acceptable equals are provided by LM Scofield Company and Texoma. Contractor to submit all color samples for approval by Engineer prior to commencement of work. Contractor shall verify layout with Engineer prior to commencement of work.

D. DECORATIVE CONCRETE DRY-SHAKE COLOR HARDENER - Packaged dry combination of materials consisting of portland cement graded quartz aggregate, coloring pigments, and placticizing admixture. Use coloring pigments that are finely ground nonfading mineral oxides interground with cement. Color as selected by Architect from manufacturer's standards, unless indicated otherwise. Minimum coverage shall be 60 lbs./100 sq. ft or per manufacturer's recommendation. A fine seeding coat to be added for non-skid surface shall be applied at rate per manufacturer's recommendations.

E. ACIDIC STAIN - Acidic-based stain shall be pre-packaged containing colorfast metallic salts. Color shall match "Walnut" stain by lncrete Systems. Acceptable equals provided by LM Scofield Company and Texoma. Contractor shall submit all color samples from manufacturer's standards for selection and approval by Engineer.

F. SURFACE SEALER - Provide two coats "Clear-Seal" from manufacturer or an approved equal.

5.12.3 – EQUIPMENT - The concrete surface shall be patterned as shown on plans. Acceptable manufacturers and styles of stencils are as follows:

COMPANY	CONTACT	PHONE
Increte Systems, Inc.	Thomas Richell	866-792-9009
L.M. Scofield Company	Bob Rounds	248-478-2026
Texoma	Karen Grindstaff	888-423-7778

The stamping pattern shall be Herringbone Used Brick or approved equal for all areas other than detectable warning strip. Detectable warning stamping pattern shall be according to MDOT Standard plan R-28-F. All stamping patterns shall be approved by the Engineer prior to commencement of work.

Once a manufacturer and stamping system has been approved, it shall be used throughout the entire project.

Upon completion of the project, the Contractor shall provide the Owner with two (2) of the stamping tools used to construct the stamped concrete. These stamps must be clean and acceptable to the Owner.

5.12.4 CONSTRUCTION METHODS

A. LAYOUT - Carefully lay out formwork and joints, taking into consideration pattern, intended aesthetics, and construction sequence. Lay out long lines of patterns to run across the normal line of sight (except where otherwise shown on Drawings).

The detectable warning area of sidewalk ramps shall receive the opposing integral color of the surrounding area.

B. PREPARATION OF BASE - Where required, excavation shall be made to the required depth and to a width that will permit forming. All unsuitable material shall be removed below the require depth and replaced with base as indicated in the plans. The prepared base shall be compacted to 95% of its maximum unit weight in accordance with Section 205 of the MOOT Standard Specifications for Construction.

C. AGGREGATE BASE - Aggregate base shall be placed and compacted per Section 302 of the 2003 MOOT Standard Specifications for Construction and per drawings or as directed by the Engineer. A vapor barrier shall not be used.

D. FORMS - Forms and forming shall meet the requirements of Subsection 803.03.B of the MDOT Standard Specifications for Construction. Check completed formwork and screeds for grade and alignment to following tolerances:

   a. Top of Forms: Not more than 1 /8 inch in 10 feet.

   b. Vertical Face on Longitudinal Axis: Not more than ¼ inch in 10 feet.

E. CONCRETE COLORING - The coloring pigment may be added at either the batch plant or to the ready mix truck at the job site. The truck mixer drum shall be rotated a minimum of 50 revolutions at mixing speed after adding the coloring pigment. The amount of coloring pigment to be added shall be as specified by the pigment manufacturer. Stenciled mock-ups shall be provided to the Engineer for approval for color prior to construction.

F. PROTECTION OF SURROUNDING SURFACES - All surrounding surfaces, including, but not limited to, walls and storefronts, shall be protected to prevent discoloration from the concrete.

G. REINFORCING MATERIALS - Reinforcement shall meet the requirements of Subsection 905 of the 2003 MDOT Standard Specifications for Construction and be as indicated in the drawings.

H. PLACING CONCRETE - Concrete placement shall meet the requirements of Subsection 803.03.C of the MDOT Standard Specifications for Construction, and as described herein. The surface shall be struck off and floated to produce a smooth even surface with a maximum surface variance of plus or minus 1/8" in 3 yards in any direction. All edges and joints shall be rounded to the specified radius with an approved finishing tool.

I. STAMPING CONCRETE - Prior to constructing the sidewalk, stamped, colored, the Contractor shall provide the Engineer with three (3) one square yard by one square yard mock-up slabs of stamped concrete sidewalk (for each stamp used) with varying stamp thickness; 1/16-1/8 in., 1/8-1/4 in. The Engineer will then determine which stamp depth shall be used for the project.

   Controls shall be laid out prior to stamping the concrete with any necessary strings and stakes for lining up the stamping tools. Unless otherwise specified, ungrouted installations shall be stamped 1 /8" - 3/8" deep. The concrete is ready to be stamped when a 3/8" deep impression made with the finger does not fill with water and the concrete maintains its shape.

The stamps must be clean of foreign matter prior to the stamping operation. It is generally recommended to clean stamps and reapply release powder to all contact surface of the stamp approximately every 25 - 30 square yards.

The freshly placed concrete surface shall be barricaded against access for at least 24 hours after the release powder has been applied. The concrete shall not be opened to pedestrian traffic until the release powder has been washed off with a power washer. Areas of high traffic shall be placed part-width.

J. ACIDIC BASED STAIN - Stain shall be applied per manufacturer's direction on a clean concrete surface that is a minimum of 14 days old. All staining techniques must be the same as the approved mock-up. Variegated appearance of stained concrete, is acceptable. Adjacent concrete shall be adequately protected to ensure the staining pattern is as indicated in the plans.

K. JOINTS - The control joints shall be sawed as soon as the concrete has hardened such that no raveling or spalling occurs, but before any random uncontrolled cracking develops. Joint depths shall be maintained at 1 /4 of the slabs thickness. All joints shall be saw cut, ¼ inch in width in accordance with the joint patterns as illustrated in the typical sections, or as directed by the Engineer. All joints, including expansion and sawed, shall be sealed with an approved color matched joint sealant, as recommended by the manufacturer.

When the sidewalk is constructed adjacent to a previously placed slab, transverse joints in the succeeding slab shall be aligned with like joints in the adjacent slab.

Expansion joint filler shall extend to the full depth of the joint with its top surface 1/8"-3/8" below the finished surface of the sidewalk. Joint Sealant used in sidewalk and sidewalk ramp joints shall be filled with a premium-quality, three component, gun-grade, colormatched, low-modulus sealant for dynamically moving joints in an exterior condition.

L. SEALING CONCRETE SURFACE - Prior to applying the surface sealer, the surface must be power washed to remove the release powder and any debris. Release agents shall be black for wood pattern and opal for stone pattern. The surface must also be allowed to completely dry prior to sealing.

The surface temperature of the concrete shall not exceed 90° For be below 40° Fat the time the sealer is applied. One uniform coat shall be applied to the concrete at 3 square yards per quart. The concrete surface shall be barricaded against access from the time of casting to at least 24 hours after the sealer is applied.

M. MAINTAINING PEDESTRAIN TRAFFIC - The concrete shall not be opened to pedestrian traffic until at least 24 hours after the sealer has been applied. During such period, entrance to all residents and businesses shall be maintained at all times. Construction should be staged to allow for such access. Where businesses are restricted to a single point of access, the Contractor shall schedule the concrete pour during non-business hours and adequately protect the surface and edges for 24 hours.

N. REPAIRS & PROTECTION - The Contractor is responsible for all costs with no additional compensation permitted for the following:

a. The Contractor is responsible for all costs associated with construction and disposal of mock-up slabs.

b. The Contractor is responsible to remove and replace concrete paving that is broken, damaged, and defective or does not meet the requirements of this Section.

c. The Contractor is responsible to drill test cores where directed by ENGINEER when necessary to determine magnitude of cracks or defective areas. Fill drilled core holes in satisfactory pavement areas with portland cement concrete bonded to paving with epoxy adhesive.

d. The Contractor is responsible to protect freshly placed concrete from premature drying and excessive cold or hot temperatures. Comply with the requirements of the Michigan Department of Transportation 2003 Standard Specifications for Construction for cold weather protection and hot weather protection during curing. In hot, dry and windy weather, protect concrete from rapid moisture loss before and during finishing operations with lncrete Systems' Delay or approved equal. Apply according to manufacturer's instructions after screeding and bull floating, but before floating. Begin curing after finishing concrete, but not before free water has disappeared from concrete surface.

e. The Contractor is responsible to protect concrete from damage. Exclude traffic from paving for at least 14 days after placement. When construction traffic is permitted, maintain paving as clean as possible by removing stains and spillage of materials as they occur.

f. After concrete has set for at least 24 hours, the Contractor is responsible to chisel to *remove* marks left by imprinting tools. Color chipped areas with slurry of color hardener mixed with water and bonding agent.

g. The Contractor is responsible to maintain decorative concrete paving free of stains, discolorations, dirt and other foreign material. Remove all hard water stains (white chalky build-up) from the top of the sealer surface with commercial grade Lime. Sweep and wash concrete paving not more than 2 days prior to date scheduled for Substantial Completion inspections.

5.12.5 MEASUREMENT & PAYMENT - The completed work as measured for DECORATIVE CONCRETE will be paid for at the contract unit price for the following contract item (pay item).

CONTRACT ITEM (PAY ITEM)	PAY UNIT
Sidewalk, Conc, 6 inch, Colored	Square Foot
Sidewalk, Conc, 6 inch, Colored with Acidic Stain	Square Foot

Sidewalk items above will be measured in place by area in square feet. Pavement items above will be measured in place by area in square yards. Payment shall include all labor, material and equipment required to perform all work in accordance with this special provision and as shown on the plans, including providing the Engineer with the final documentation of the concrete mix design.

Steel reinforcement shall be paid for separately.

Cost of concrete, surface sealer, admixtures and dry shake hardeners shall be included in the above pay items and not paid for separately.

Subbase, GIP and Aggregate Base, 8 inch shall be paid separately.

Cost of joints and sawcutting shall be included in the above pay items and not paid for separately.

5.13 CATCH BASIN SPECIAL DETAIL

5.13.1 DESCRIPTION - The work covered by this special provision shall be in accordance with Section 403 of the MDOT 2012 Standard Specifications for Construction except where modified here in.

5.13.2 MATERIALS - All structures shall be precast units unless permission is granted by the Engineer to use brick and/or block for their construction. Concrete footing shall be 3500 psi concrete compressive strength in 28 days. Brick shall be ASTM C-139 Lime Cement, laid radically. Precast Catch Basins shall be ASTM C-478. Joints for precast sections shall be O-ring rubber gasket joints similar to ASTM C-443. Holes for pipe openings shall not be more than 6" larger than the outside diameter of the pipe and shall be filled with non-shrink mortar.

Backfill material shall meet the grading requirements for Granular Class II.

5.13.3 CONSTRUCTION METHODS - The work covered by this special provision shall be in accordance with the applicable requirements in Section 403 except for the following: Catch Basin Special Detail shall be constructed as shown on Sheet 2 of the Construction Plans.

5.13.4 MEASUREMENT AND PAYMENT - The completed work, Catch Basin Special Detail, including all materials, labor and equipment, will be paid for at the contract unit price for the following contract item (pay item).

PAY ITEM	PAY UNIT
CATCH BASIN SPECIAL DETAIL	Each

5.14 CATCH BASIN 2 FT ID SPECIAL DETAIL

5.14.1 DESCRIPTION - The work covered by this special provision shall be in accordance with Section 403 of the MDOT 2012 Standard Specifications for Construction except where modified here in.

5.14.2 MATERIALS - All structures shall be precast units unless permission is granted by the Engineer to use brick and/or block for their construction. Concrete footing shall be 3500 psi concrete compressive strength in 28 days. Brick shall be ASTM C-139 Lime Cement, laid radially. Precast Catch Basins shall be ASTM C-478. Holes for pipe openings shall not be more than 6" larger than the outside diameter of the pipe and shall be filled with non-shrink mortar.

Backfill material shall meet the grading requirements for Granular Class II.

5.14.3 CONSTRUCTION METHODS - he work covered by this special provision shall be in accordance with the applicable requirements in Section 403 except for the following: Catch Basin 2 Ft ID Special Detail shall be constructed as shown on Sheet 2 of the Construction Plans.

5.14.4 MEASUREMENT AND PAYMENT - The completed work, Catch Basin 2 Ft ID Special Detail, including all materials, labor and equipment, will be paid for at the contract unit price for the following contract item (pay item).

PAY ITEM	PAY UNIT
CATCH BASIN 2 FT ID SPECIAL DETAIL	Each

5.15 DR STRUCTURE COVER, MODIFIED

5.15.1 DESCRIPTION - The work covered by this special provision shall be in accordance with Section 403 of the MDOT 2012 Standard Specifications for Construction except where modified herein.

5.15.2 MATERIALS - On this project the following drainage structure covers will be used:

Dr Structure Cover, Type B, Modified shall conform to Manhole Casting East Jordan #1045 or equal w/ Solid Type A Cover (1 @ 330 lbs each)

Dr Structure Cover, Type C - Modified shall conform to Curb style Catch Basin casting East Jordan #7045 or equal (__ @ 490 lbs. each)

Dr Structure Cover, Type D - Modified shall conform to Flat style Catch Basin casting East Jordan #5105 or equal (3 @ 435 lbs. each)

Note: the EJ #1045 castings shall have the City of Muskegon LOGO cast into them according to the Detail for Cover B on Sheet 2 of the Construction Plans.

5.15.3 CONSTRUCTION METHODS - The work covered by this special provision shall be in accordance with the applicable requirements in Section 403.

5.14.4 MEASUREMENT AND PAYMENT - The completed work, Drainage Structure Cover, Type__, Modified including all materials, labor and equipment, as measured will be paid for at the contract unit price for the following contract item (pay item).

PAY ITEM	PAY UNIT
Dr Structure Cover, Type B, Modified	Each
Dr Structure Cover, Type D, Modified	Each

5.16 DECORATIVE BLOCK WALL SPECIAL DETAIL

5.16.1 FENCE BLOCK SPECIFICATIONS & INSTALLATION INSTRUCTIONS

ARTICLE 1: BACKGROUND

1.1 Nature of Project

1.1.1 The work to be performed includes sourcing, providing, and installing concrete free- standing fence wall blocks to the lines and grades as specified on the project construction drawings and as may be further specified herein.

1.1.2 All free-standing fence walls are to be built pursuant to a site specific design and analysis prepared by a registered professional engineer who is familiar with the product (the "wall engineer").

ARTICLE 2: FENCE WALL BLOCKS

2.1 The Fence Block

2.1.1 The fence wall block shall be produced by Quality Precast Inc., an authorized ReCon manufacturer.

2.1.2 The block shall have average 28-day compressive strength of no less than 4000 PSI.

2.1.3 Concrete shall have air entrainment by volume (as measured in the plastic state in accordance with ASTM C172) of:

2.1.3.1 5.5 - 8.5 percent, or

2.1.3.2 In conformity with ASTM C94 (Table 1 and Section 7), latest revision.

2.1.4 Exterior dimension at the face shall be 48" by 16" for the full fence block; 24" by 16" for the half fence block; and 48" by 6 ½" for the capstone. Depth of the full and half fence block shall be 24". Depth of the capstone shall be 26".

2.1.5 Texture on the face of the fence block: Weathered Edge

ARTICLE 3: FREE STANDING FENCE WALL CONSTRUCTION

3.1 Excavation

3.1.1 The contractor shall excavate to the lines and grades shown on the construction drawings. The contractor shall be careful not to disturb base beyond the lines shown.

3.2 Foundation Soil Preparation

3.2.1 Foundation soil shall be excavated as required for footing or base dimensions shown on the construction drawing, or as directed by the Engineer. Foundation soils must have a minimum bearing capacity of 2000 pounds per sq. ft.

3.2.2 Walls constructed on frost susceptible or expansive soils may require special provisions, to avoid the detrimental effects of volume changes in the soils. Generally, differential vertical movement of bearing surfaces greater than 1 inch in 10 feet would be unacceptable. Special provisions may include increased depth of embedment, installation of buried drain tile, positive surface drainage away from the wall, etc. A qualified geotechnical engineer should be engaged to confirm soil bearing capacity and other soil properties which may require special design considerations.

3.3 Base / Leveling Pad

3.3.1 Base must be placed as shown on the construction drawings with a minimum thickness of 6 inches. Base materials are to be as specified by the wall engineer. Generally the Base shall be on a layer of compacted granular material to permit drainage beneath the wall. Suitable granular materials are coarse sand, crushed stone, or a stabilized base material typical for pavements (Class Five). The width of the prepared base must extend a minimum of 6 inches in front of both faces of the Fence Block (i.e., a minimum width of 36").

3.3.2 Base materials shall be placed on engineered fill or competent natural soils with a minimum bearing capacity of 2000 pounds per sq. ft.

3.3.3 Base material shall be compacted so as to provide a smooth, hard surface on which to place the first course of units. Compaction will be with mechanical plate compactors to 95% of standard proctor.

3.3.4 Base shall be prepared to ensure contact of Fence Base Block unit with base. Spacing or gaps between blocks shall not be allowed.

3.3.5 Base materials shall be to the depths and widths shown. The contractor may opt for using reduced depth of sands and gravel and a 1" to 2" concrete topping. Concrete shall be lean, unreinforced and a maximum of two inches thick. Where a reinforced footing is required, place below frost line.

3.4 Unit Installation

3.4.1 First course on units shall be the ***Base Fence Block*** units and shall be placed on the prepared base. The first course is the most important to ensure accurate and acceptable results.

3.4.2 Ensure that units are in full contact with base.

3.4.3 Units are placed end to end for full length of wall alignment. Alignment shall be done by using a string line or offset from a base line.

3.4.4 After the Base Fence Block has been placed and before proceeding to the placement of the next row of block, compaction to the specified embedment depth must be done on both sides of the Base Fence Block taking care to keep the blocks level.

3.4.5 See Fence and Guardrail Block Reference Manual for the various types of Fence Blocks available for construction of the wall.

3.4.6 A Capstone or a Full High Cap (see Fence and Guardrail Block Reference Manual) should be used to cap the Fence Block. The Capstone should be glued with a concrete adhesive.

3.5 Turning Radius

3.5.1 Given the design of the Fence Block with an "end to end tongue and groove", it is possible to do curved walls using the standard Fence Block. When building curved fence walls, be aware that on the outside / concave curve side of the wall there will be a "gap" between the textured portion of the fence blocks. However, the tongue which protrudes from the end of the Fence Block will fill that "gap" so that the wall remains a solid wall with no visible spaces or gaps into the wall itself. The minimum turning radius that can be achieved so that the tongue on the end of the Fence Block reaches across the "gap" is 15 feet.

3.5.2 A curved wall can reduce the "engineered strength" of the Fence Wall. It is important that the registered professional engineer that designed the wall be aware of the curves in the wall and consider the impact of the curves in the design of the wall.

3.5.3 Capstone Placement

3.5.3.1 With a curved wall, the Capstone Block will need to be cut in the field before it is installed and glued.

ARTICLE 4: STAINING AND SEALING

4.1 Staining

4.1.1 Before staining, the wall should be power washed and allowed to dry. This removes any dirt and / or form oil from the face of the block. This is very important.

4.1.2 Recommended stains include Sherwin Williams H & C Shield Plus Concrete Stain or Increte Stone Essence. Both are latex / water based and can be applied with either an electric airless sprayer or a compressed air sprayer. The concrete should be at least 28 day cured before staining.

4.1.3 The wall can be stained a one coat one color stain, or it can be stained with a base color and then highlighted with several different shades to more closely approximate a weathered natural stone look. Generally, the "highlights" are applied to several blocks in a random fashion, and then before the highlights dry, they are wiped out with a wet sponge. This helps to blend the highlights into the block, making them look more natural.

4.1.4 The stain should not be applied if it is going to be below 45 degrees prior to the stain having a chance to dry. Consult the manufacturer's instructions for proper application of the stains.

4.2 Sealing

4.2.1 Some customers ask that their wall be sealed. This may be particularly relevant if the wall is in a road splash zone where winter road salts might get on the face of the wall.

4.2.2 H&C Concrete Sealer is recommended.

ARTICLE 5: WARRANTY

5.1 Each Block will have a 28 day compressive strength of at least 4000 PSI for 15 years after proper installation. If a Block does not meet this warranty standard, please notify the manufacturer in writing. If after it has been determined that the Block has not met the specifications, the manufacturer will have shipped to you, replacement Blocks which shall be the manufacturer's sole remedy for breach of this warranty. However, neither the manufacturer nor ReCon Wall Systems, Inc. shall have any obligation to install such replacement Blocks.

5.2 This warranty shall not apply to any Block which is damaged, defective or fails to meet the warranty standard due to improper installation of the Block, chemical contact, structural design of the wall, or excessive and unforeseen site conditions beyond the manufacturer's or ReCon Wall Systems, Inc.'s control.

5.3 The above warranty is the exclusive limited product warranty. ALL OTHER WARRANTIES, EXPRESS OR IMPLIED, INCLUDING WARRANTIES OF MERCHANTABILITY OR FITNESS FOR A PARTICULAR PURPOSE, ARE DISCLAIMED

This Specification and Installation Instruction should be read in conjunction with the Fence and Guardrail Block Reference Manual.
Index of Important Engineering Reports:

Ericksen Roed & Associates Structural Engineers Report dated 12/2/05, Section 1.0, Free-Standing Wall and Exhibit A.
MRJ Engineering Barrier Sliding Analysis 10/3/05 and 11/5/05

5.16.2 MEASUREMENT AND PAYMENT - The completed work, Decorative Block Wall Special Detail including all materials, labor, and equipment, as measured will be paid for at the contract unit price for the following item (pay item).

PAY ITEM	PAY UNIT
DECORATIVE BLOCK WALL SPECIAL DETAIL	Foot

View at the corner of W. Clay and Jefferson. Looking down Jefferson.

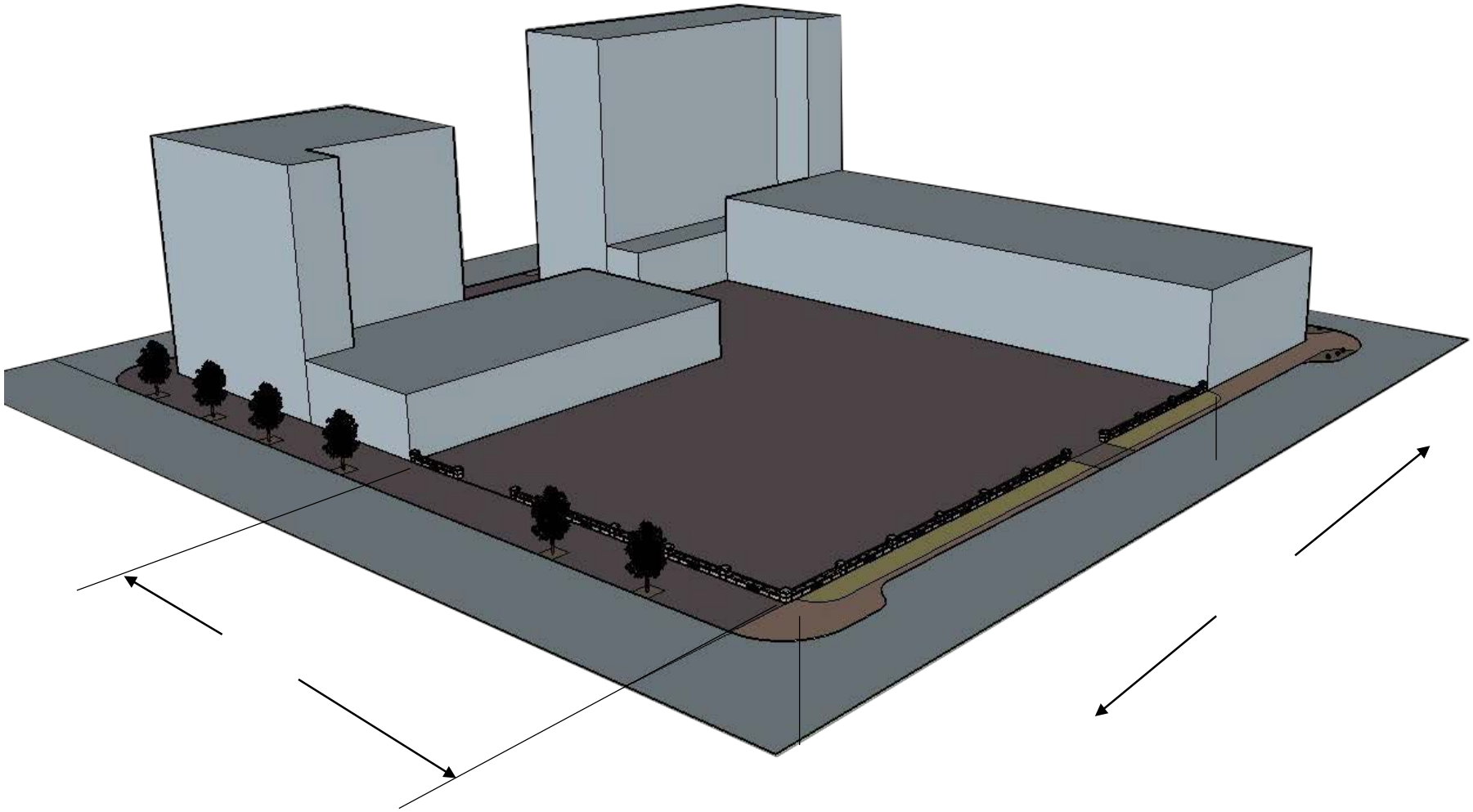

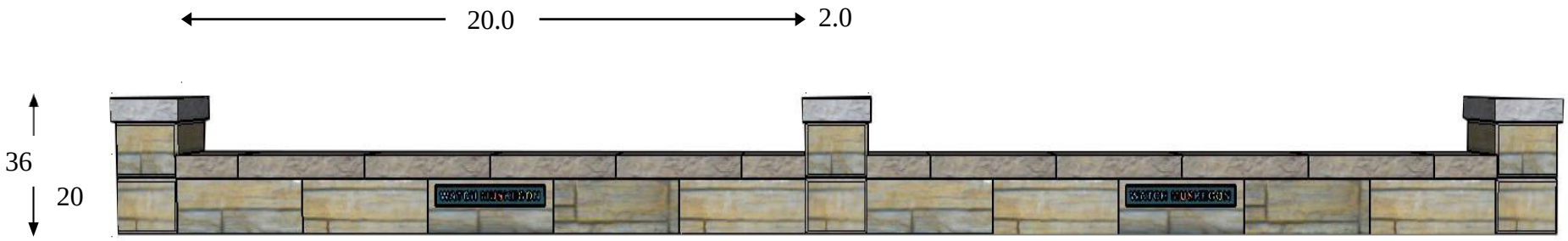

*Wall is designed to be embedded 2” below grade. Once installed, wall height will be 20 ½” and column height will be 36 ½”.

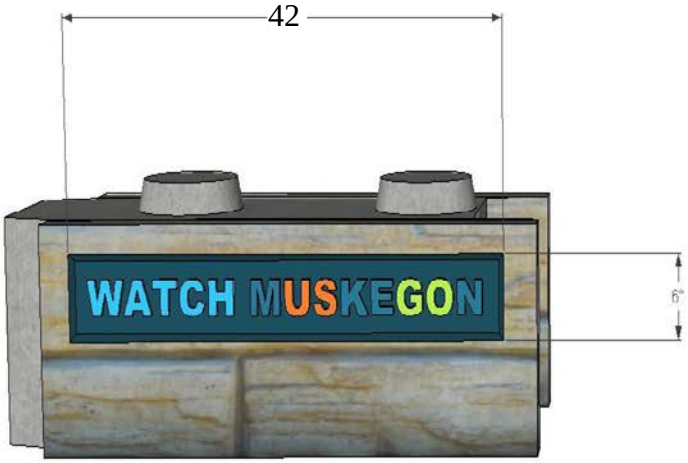

Logo with dark blue background

Logo with white background

*The “Watch Muskegon” logos are recessed into the face of the block. The “Watch Muskegon” text is elevated from the recessed background to match the existing face of the block.

PART 6 – MDOT SPECIFICATIONS

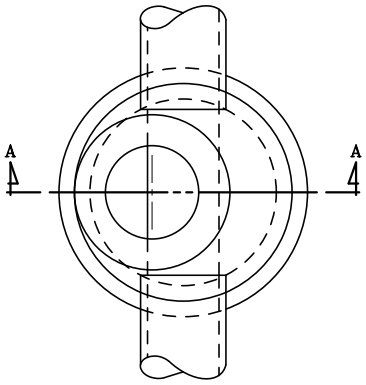

PLAN VIEW

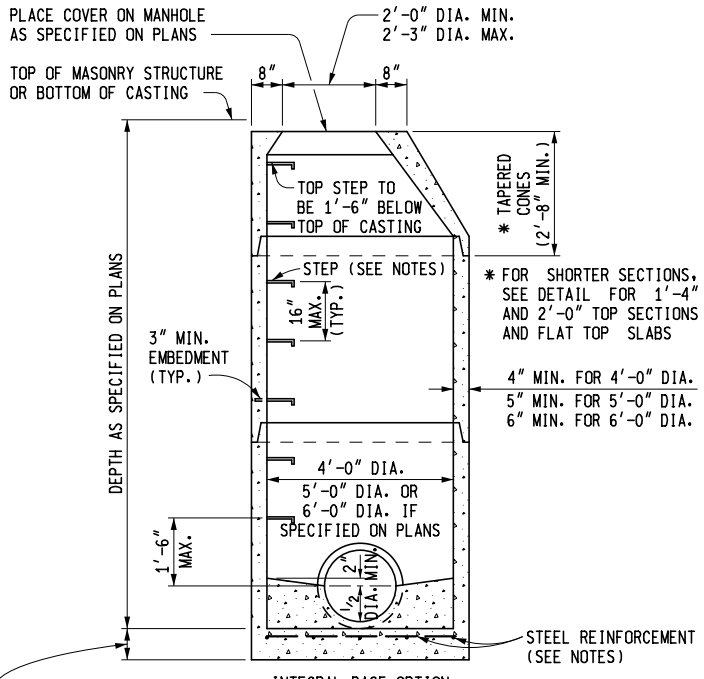

SECTION A - A

TYPICAL MANHOLE

PRECAST REINFORCED CONCRETE SHOWN
OTHER OPTIONS INCLUDE CONCRETE BLOCK, BRICK, OR CAST-IN-PLACE WALL SECTIONS
SEE TYPICAL WALL SECTIONS FOR WALL THICKNESS

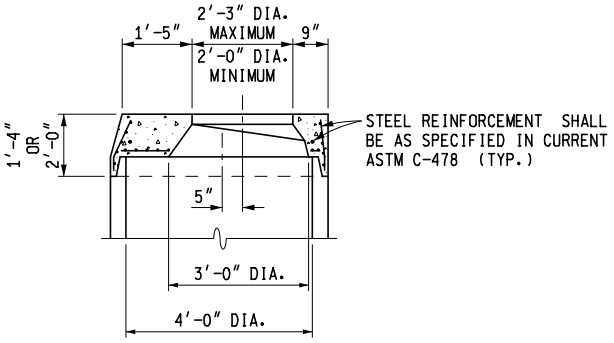

DETAIL FOR 1'-4" & 2'-0" TOP SECTIONS

SHAPE MAY VARY FROM DETAIL SHOWN BUT MUST COMPLY WITH ASTM C-478 AND JOINTS SHALL BE COMPATIBLE WITH THE RISER

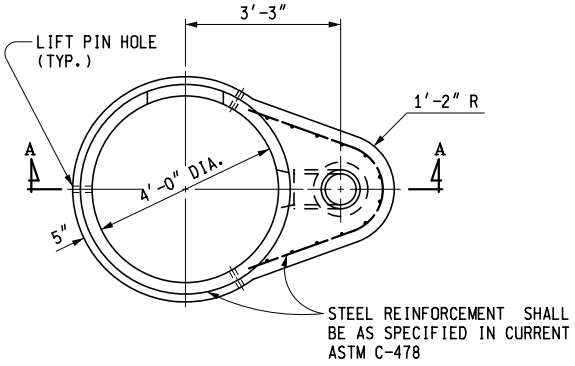

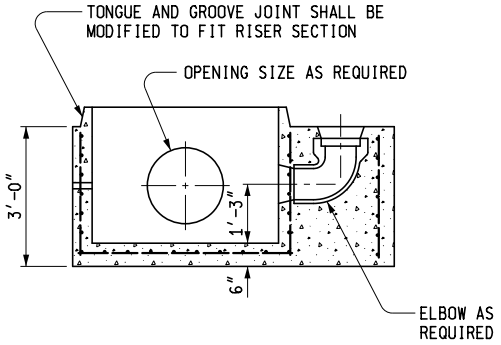

SECTION A - A

TYPICAL PRECAST REINFORCED BOTTOM SECTION FOR DROP MANHOLE

MDOT Michigan Department of Transportation

PREPARED BY DESIGN DIVISION

DRAWN BY: B.L.T.

CHECKED BY: W.K.P.

DEPARTMENT DIRECTOR
Kirk T. Steudle

APPROVED BY: _____
DIRECTOR, BUREAU OF FIELD SERVICES

APPROVED BY: _____
DIRECTOR, BUREAU OF DEVELOPMENT

MICHIGAN DEPARTMENT OF TRANSPORTATION
BUREAU OF DEVELOPMENT STANDARD PLAN FOR

DRAINAGE STRUCTURES

F.H.W.A. APPROVAL	6-15-2016 PLAN DATE	R-1-G	SHEET 1 OF 9

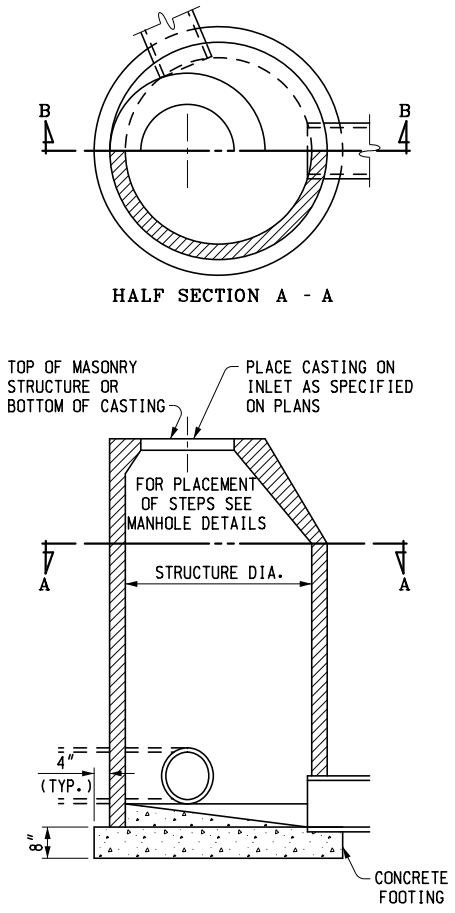

SEE MANHOLE DETAILS FOR SIZE AND BASE OPTIONS
SECTION B - B
INLET

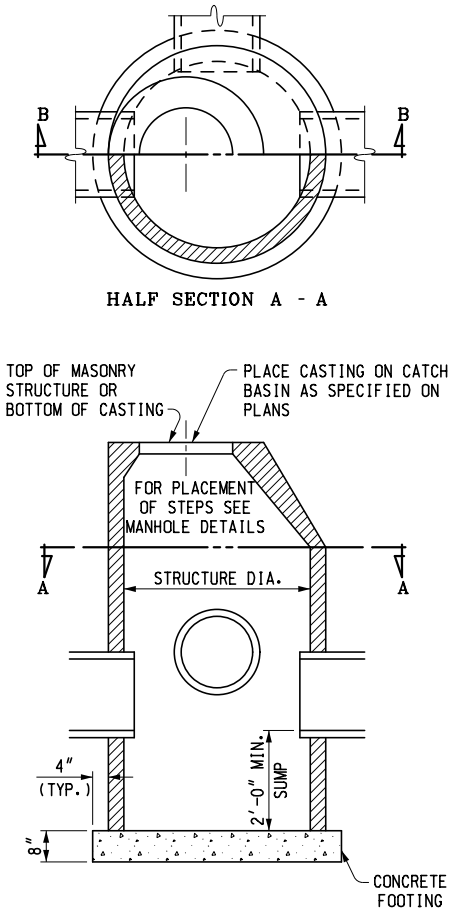

SEE MANHOLE DETAILS FOR SIZE AND BASE OPTIONS
SECTION B - B
CATCH BASIN

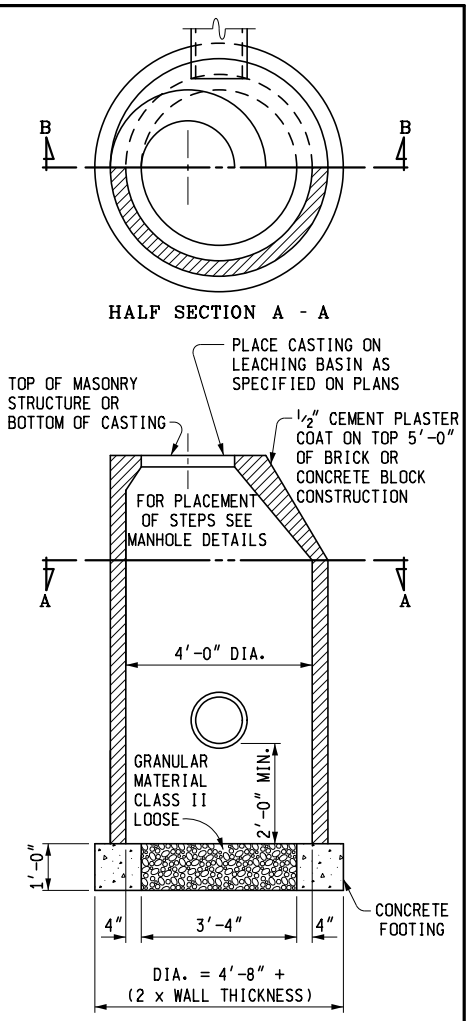

SEE MANHOLE DETAILS FOR BASE OPTIONS
SECTION B - B
LEACHING BASIN

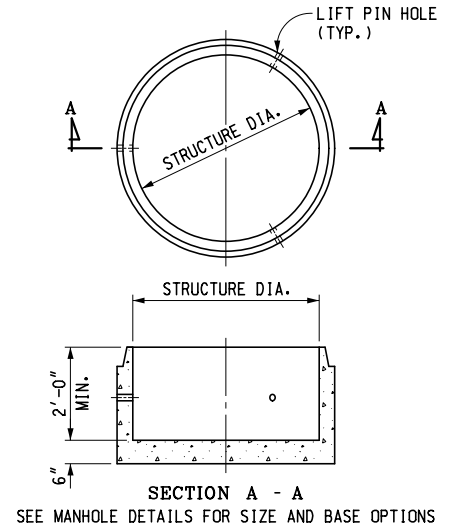

SECTION A - A
SEE MANHOLE DETAILS FOR SIZE AND BASE OPTIONS

PRECAST SUMP
FOR PRECAST RISERS

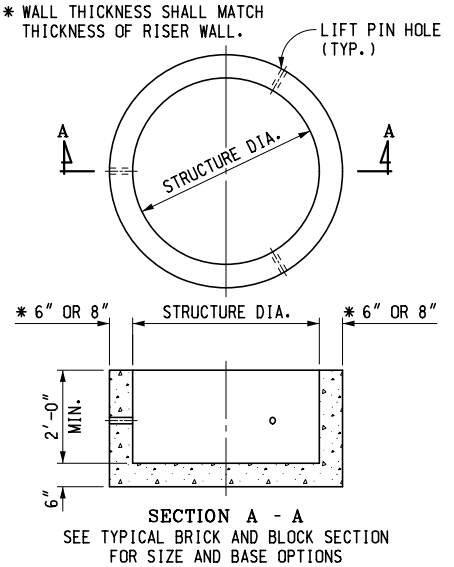

SECTION A - A
SEE TYPICAL BRICK AND BLOCK SECTION
FOR SIZE AND BASE OPTIONS

PRECAST SUMP FOR BRICK
OR BLOCK CONSTRUCTION

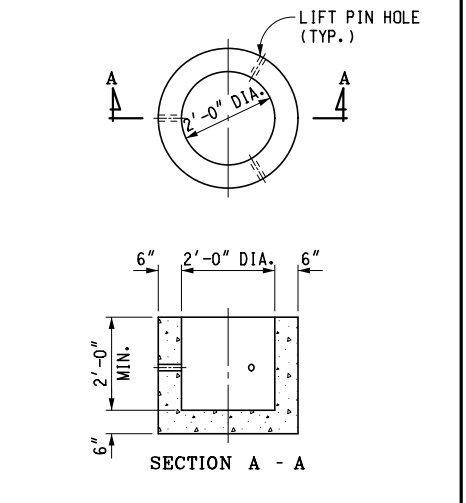

SECTION A - A

PRECAST SUMP FOR
2'-0" DIA. STRUCTURES

MICHIGAN DEPARTMENT OF TRANSPORTATION
BUREAU OF DEVELOPMENT STANDARD PLAN FOR

DRAINAGE STRUCTURES

F.H.W.A. APPROVAL	6-15-2016 PLAN DATE	R-1-G	SHEET 2 OF 9

* 4 BLOCK MIN. FOR 4'-0" DIA. STRUCTURE
6 BLOCK MIN. FOR 5'-0" DIA. STRUCTURE
6 BLOCK MIN. FOR 6'-0" DIA. STRUCTURE

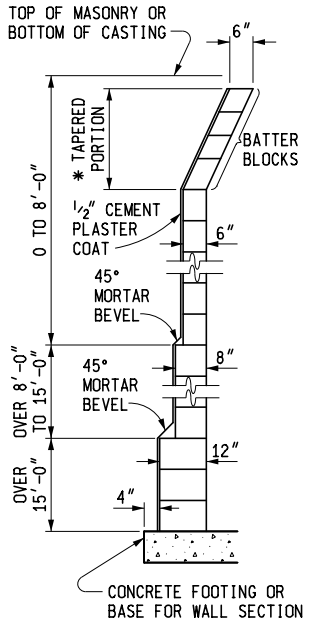

TYPICAL CONCRETE BLOCK WALL SECTION

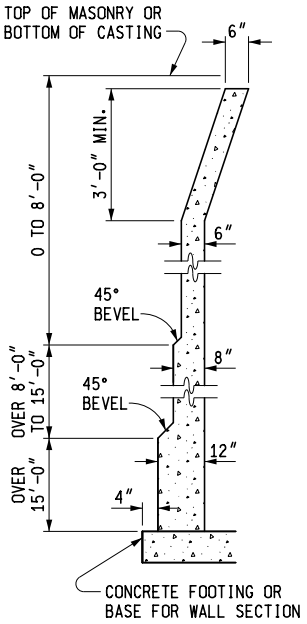

TYPICAL CAST-IN-PLACE CONCRETE WALL SECTION

* 5'-0" MIN. FOR 4'-0" DIA. STRUCTURE
6'-0" MIN. FOR 5'-0" DIA. STRUCTURE
6'-0" MIN. FOR 6'-0" DIA. STRUCTURE

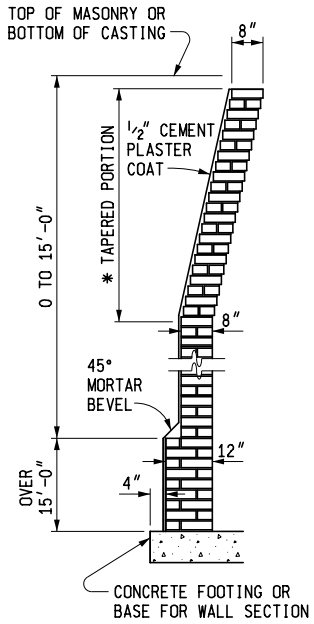

TYPICAL BRICK WALL SECTION

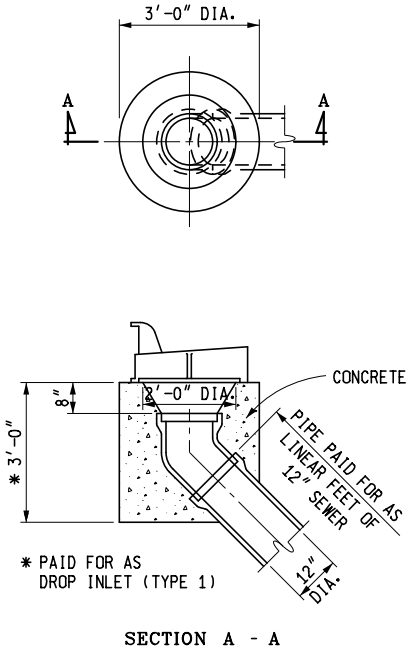

SECTION A - A

DROP INLET (TYPE 1)

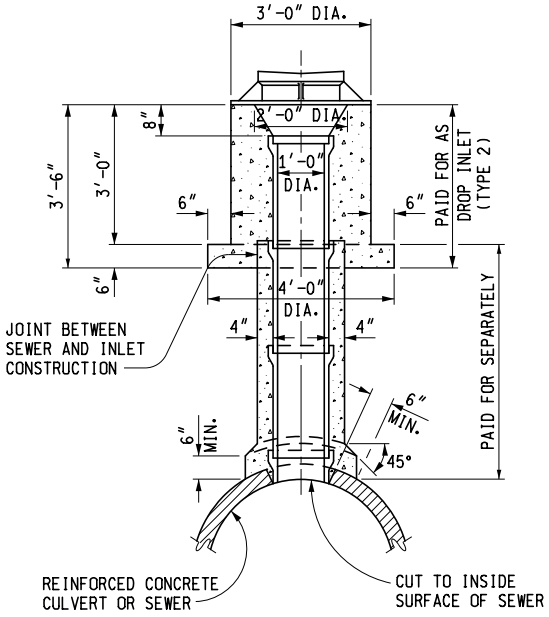

BACKFILL SHALL BE PLACED TO BOTTOM OF INLET AND COMPACTED BEFORE CONSTRUCTING THE INLET

DROP INLET (TYPE 2)

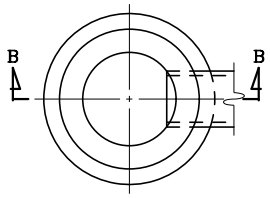

SECTION A - A

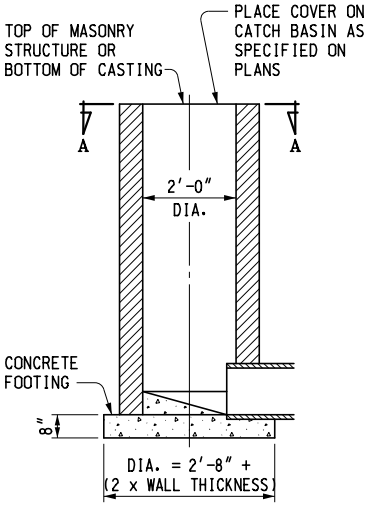

SECTION B - B

INLET

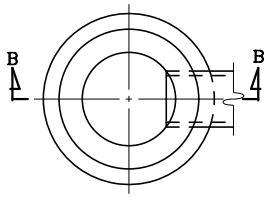

SECTION A - A

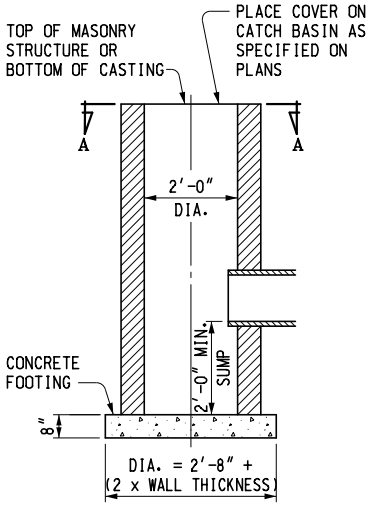

SECTION B - B

CATCH BASIN

MICHIGAN DEPARTMENT OF TRANSPORTATION
BUREAU OF DEVELOPMENT STANDARD PLAN FOR

DRAINAGE STRUCTURES

F.H.W.A. APPROVAL	6-15-2016 PLAN DATE	R-1-G	SHEET 3 OF 9

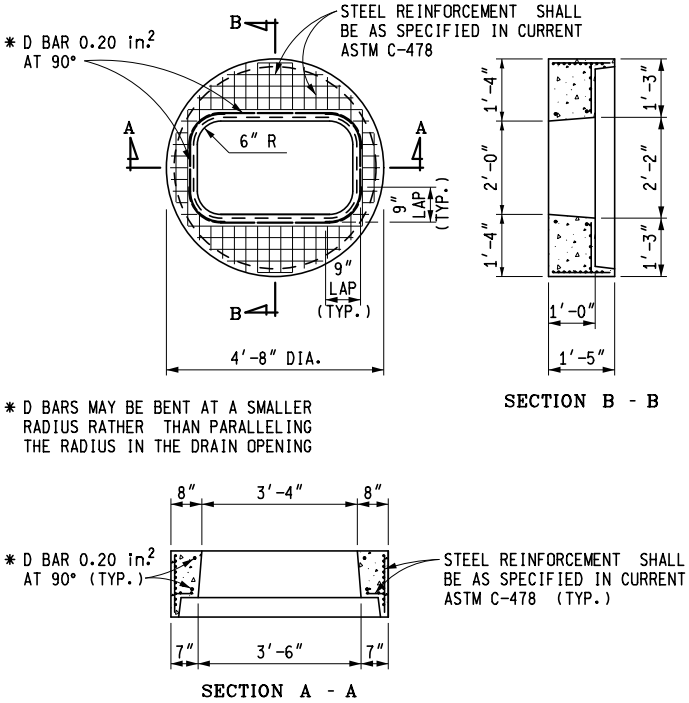

PRECAST FLAT SLAB TOP FOR PRECAST CONCRETE STRUCTURE, 2' x 4' CASTING

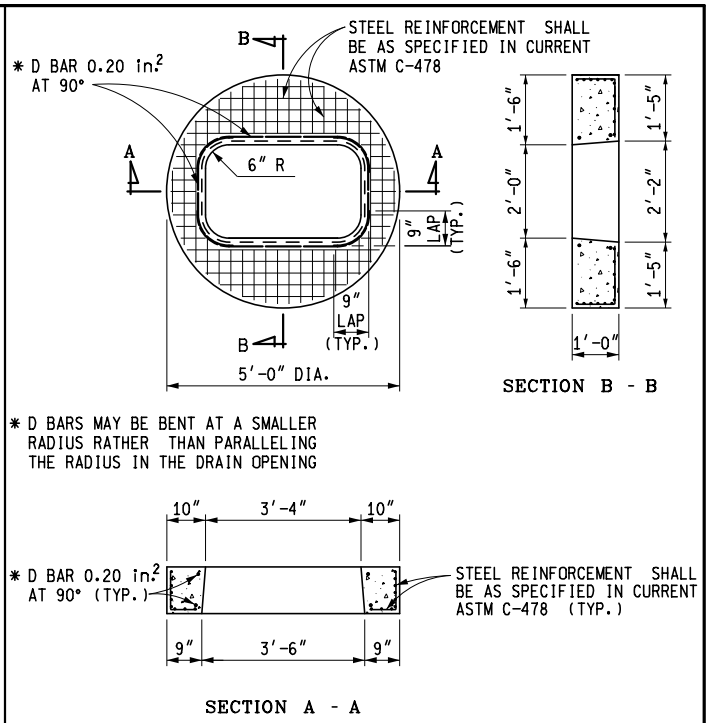

PRECAST FLAT SLAB TOP FOR MASONRY STRUCTURE, 2' x 4' CASTING

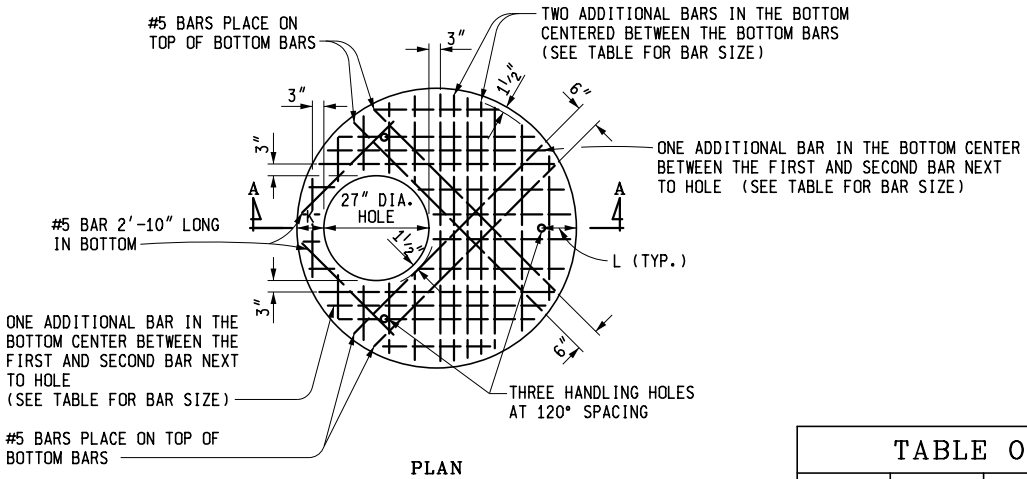

PLAN
(SHOWING BOTTOM LAYER OF REINFORCEMENT)

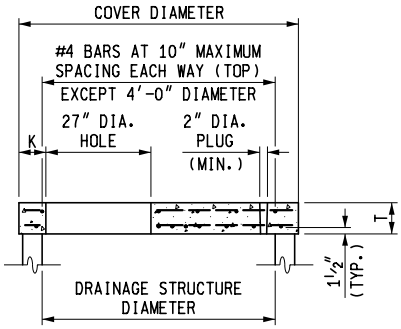

SECTION A - A

TABLE OF DIMENSIONS					
STRUCTURE DIAMETER	COVER DIAMETER	T	K	L	BAR MAXIMUM SPACING (BOTTOM EACH WAY)
* 4'-0"	58"	6"	6"	8"	#5 AT 6"
5'-0"	72"	8"	7"	9"	#5 AT 7"
6'-0"	86"	8"	8"	10"	#5 AT 6"
7'-0"	101½"	12"	8¾"	11"	#5 AT 5"
8'-0"	114"	12"	9"	11"	#6 AT 6"
9'-0"	128"	12"	10"	12"	#5 AT 6"
10'-0"	140"	12"	10"	13"	#5 AT 6"

* ONLY BOTTOM LAYERS OF STEEL NECESSARY

PRECAST REINFORCED CONCRETE FLAT SLAB TOP

MICHIGAN DEPARTMENT OF TRANSPORTATION
BUREAU OF DEVELOPMENT STANDARD PLAN FOR

DRAINAGE STRUCTURES

F.H.W.A. APPROVAL	6-15-2016 PLAN DATE	R-1-G	SHEET 4 OF 9

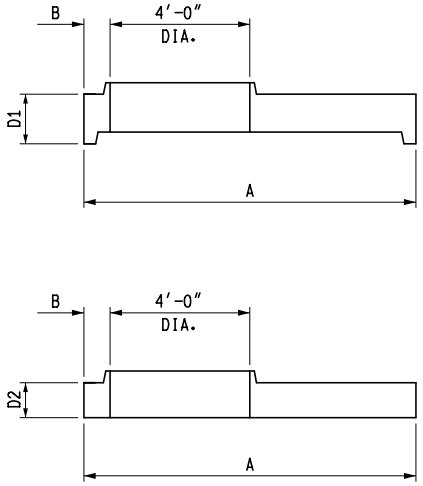

PRECAST REDUCER CAP

REDUCER CAP DIMENSIONS				
STRUCTURE DIAMETER	CAP DIAMETER "A"	B	CAP DEPTH "D1"	CAP DEPTH "D2"
7′-0″	101½″	8¾″	1′-5″	12″
8′-0″	114″	9″	1′-5″	12″
9′-0″	128″	10″	1′-5″	12″
10′-0″	140″	10″	1′-6″	12″

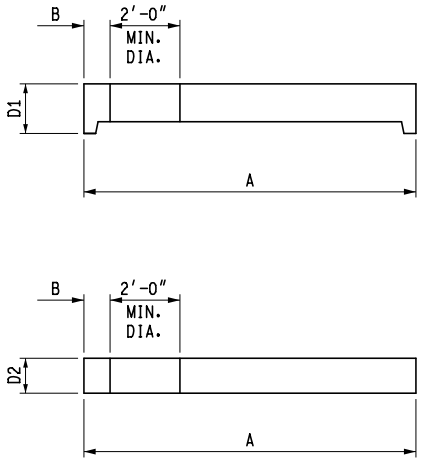

PRECAST FLAT SLAB TOP

FLAT SLAB TOP DIMENSIONS				
STRUCTURE DIAMETER	COVER DIAMETER "A"	B	COVER DEPTH "D1"	COVER DEPTH "D2"
7′-0″	101½″	8¾″	1′-5″	12″
8′-0″	114″	9″	1′-5″	12″
9′-0″	128″	10″	1′-5″	12″
10′-0″	140″	10″	1′-6″	12″

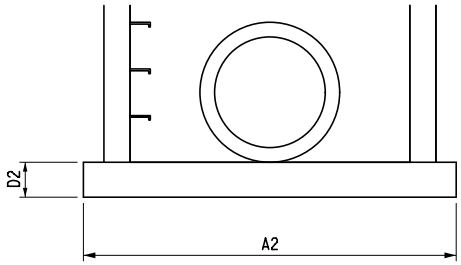

SEPARATE BASE OPTION

BASE AND RISER DIMENSIONS					
STRUCTURE DIAMETER	BASE DIAMETER "A1"	BASE DIAMETER "A2"	MIN. WALL THICKNESS "T"	BASE DEPTH "D1"	BASE DEPTH "D2"
7′-0″	101½″	108″	7″	8″	12″
8′-0″	114″	128″	8″	8″	12″
9′-0″	128″	140″	9″	8″	12″
10′-0″	140″	154″	10″	8″	12″

MICHIGAN DEPARTMENT OF TRANSPORTATION
BUREAU OF DEVELOPMENT STANDARD PLAN FOR

DRAINAGE STRUCTURES

F.H.W.A. APPROVAL	6-15-2016 PLAN DATE	R-1-G	SHEET 5 OF 9

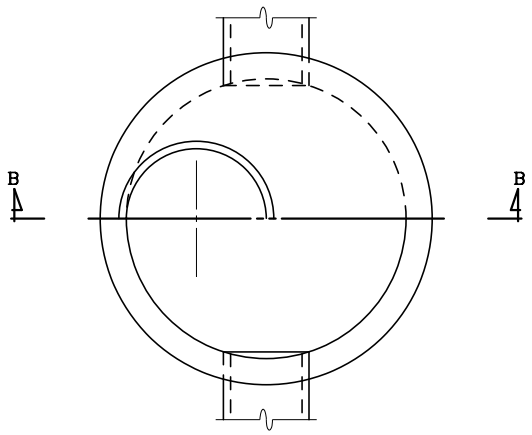

HALF SECTION A - A

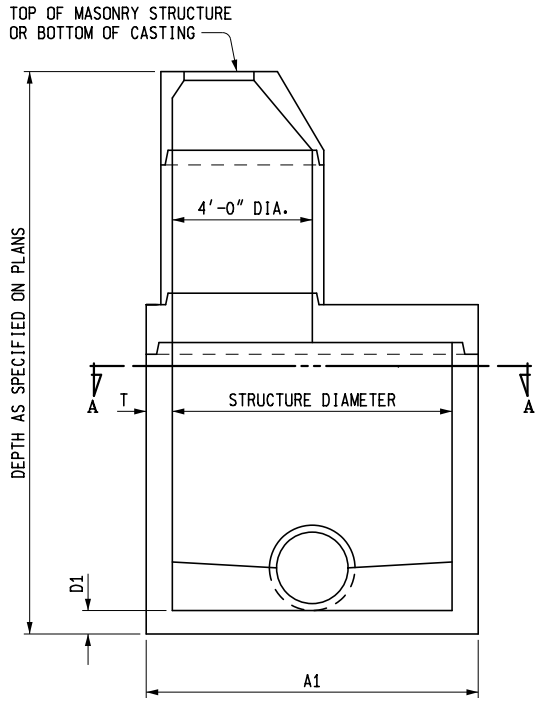

SECTION B - B
SHOWING REDUCER CAP

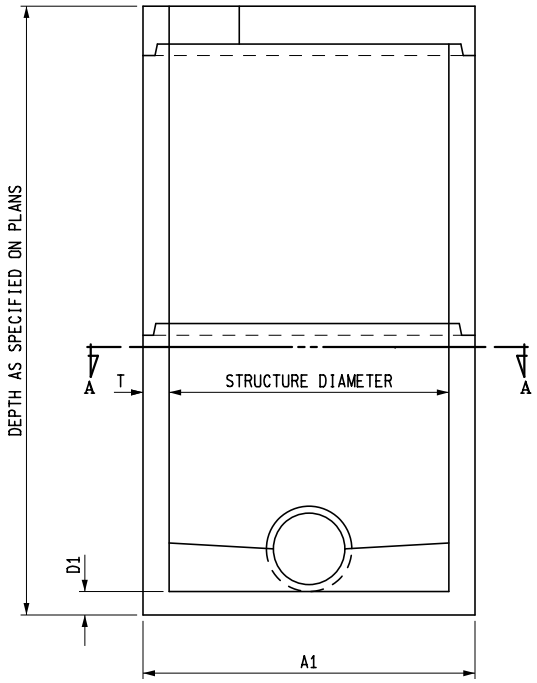

SECTION B - B
SHOWING FLAT SLAB TOP

PRECAST MANHOLE

MICHIGAN DEPARTMENT OF TRANSPORTATION
BUREAU OF DEVELOPMENT STANDARD PLAN FOR

DRAINAGE STRUCTURES

F.H.W.A. APPROVAL	6-15-2016 PLAN DATE	R-1-G	SHEET 6 OF 9

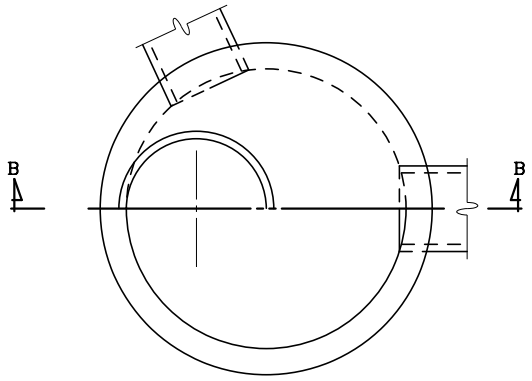

HALF SECTION A - A

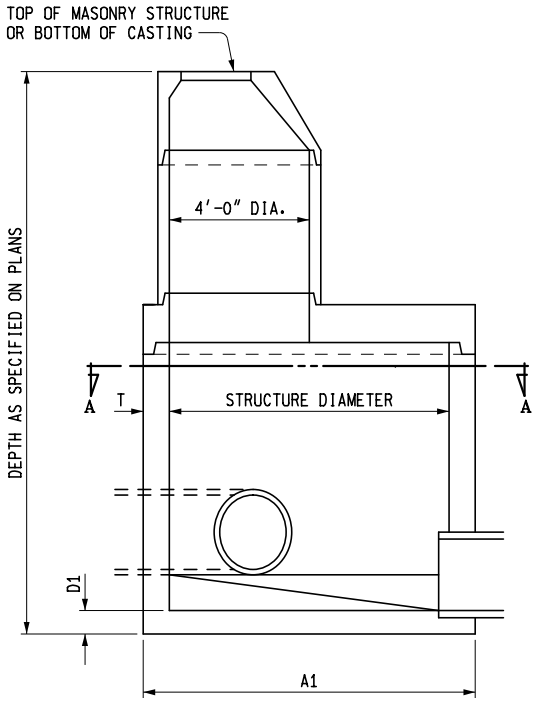

SECTION B - B
SHOWING REDUCER CAP

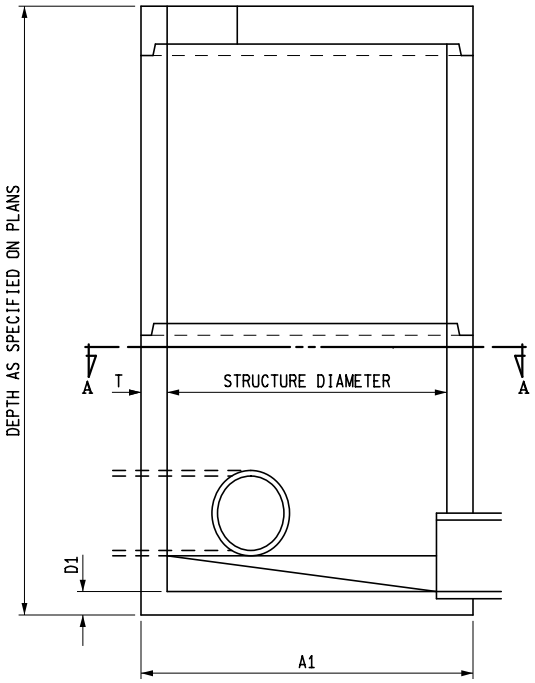

SECTION B - B
SHOWING FLAT SLAB TOP

PRECAST INLET

MICHIGAN DEPARTMENT OF TRANSPORTATION
BUREAU OF DEVELOPMENT STANDARD PLAN FOR

DRAINAGE STRUCTURES

F.H.W.A. APPROVAL	6-15-2016 PLAN DATE	R-1-G	SHEET 7 OF 9

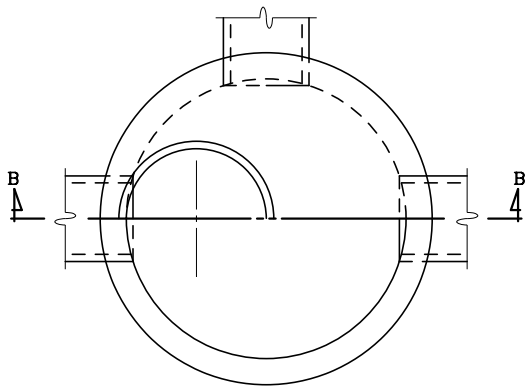

HALF SECTION A - A

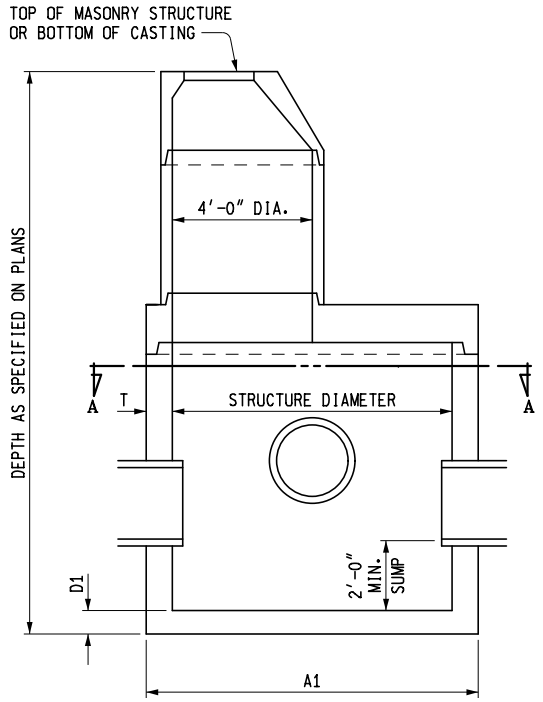

SECTION B - B
SHOWING REDUCER CAP

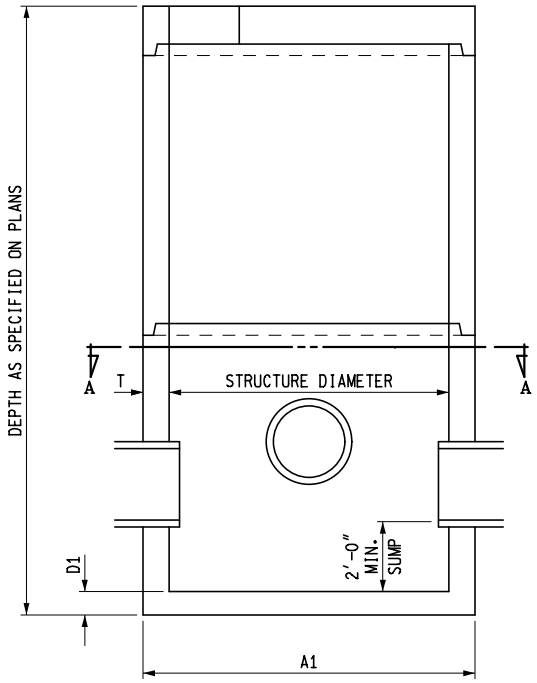

SECTION B - B
SHOWING FLAT SLAB TOP

PRECAST CATCH BASIN

MICHIGAN DEPARTMENT OF TRANSPORTATION
BUREAU OF DEVELOPMENT STANDARD PLAN FOR

DRAINAGE STRUCTURES

F.H.W.A. APPROVAL	6-15-2016 PLAN DATE	R-1-G	SHEET 8 OF 9

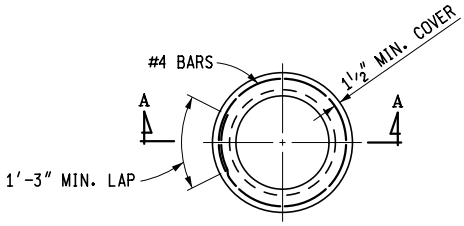

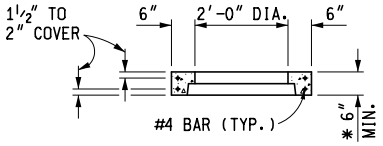

SECTION A - A

* WHEN RISER TONGUE LENGTH IS GREATER THAN 3", USE 2 TIMES THE TONGUE LENGTH.

NOTE: PRECAST RISER SHALL FULLY ENGAGE THE TONGUE OF THE RISER PIPE.

PRECAST RISER RING

(FOR 2'-0" DIAMETER STRUCTURE)

NOTES:

THE DRAINAGE STRUCTURE COVERS ALLOWED FOR USE ON THESE DRAINAGE STRUCTURES ARE SPECIFIED IN SUBSEQUENT STANDARD PLANS AND ARE INTERCHANGEABLE ON ANY STRUCTURE.

THE TOPS OF MASONRY STRUCTURES SHALL BE SUFFICIENTLY LOW TO PERMIT PROPER ADJUSTMENT OF COVER TO GRADE USING MORTAR OR BRICK AS DIRECTED BY THE ENGINEER.

PREMIUM JOINTS ARE REQUIRED ON ALL SANITARY MANHOLES. SEE ASTM DESIGNATION C-923.

GRANULAR MATERIAL CLASS III SHALL BE USED IN BACKFILLING AROUND ALL STRUCTURES THAT FALL WITHIN THE 1:1 INFLUENCE LINES FROM THE EDGE OF PAVEMENT OR BACK OF CURB.

STEPS FOR DRAINAGE STRUCTURES SHALL BE OF AN APPROVED DESIGN AND MADE FROM CAST IRON, ALUMINUM, OR PLASTIC COATED STEEL. RUNGS SHALL BE A MINIMUM OF 10" IN CLEAR LENGTH, DESIGNED TO PREVENT THE FOOT FROM SLIPPING OFF THE END. THE MINIMUM HORIZONTAL PULL OUT LOAD SHALL BE 400 LBS. THE MINIMUM VERTICAL LOAD SHALL BE 800 LBS.

THE BELL SHALL BE REMOVED FOR THE FIRST LENGTH OF OUTLET PIPE PROJECTING THROUGH THE WALL OF THE MANHOLE.

PRECAST CONCRETE SECTIONS, SUMPS, AND FLAT TOP SLABS SHALL BE BUILT ACCORDING TO CURRENT ASTM C-478 AND ACCORDING TO DETAILS SPECIFIED ON THIS PLAN. PRECAST REINFORCED CONCRETE FLAT TOP SLAB SHALL BE MARKED TO SHOW LOCATION OF REINFORCEMENT. THE WALLS OF THE PRECAST UNITS MAY HAVE A SLIGHT TAPER TO ALLOW FOR FORM REMOVAL. PRECAST CONCRETE 2'-0" DIAMETER DRAINAGE STRUCTURES SHALL HAVE A MINIMUM 3" WALL THICKNESS WITH A 6" MINIMUM BEARING SURFACE ON TOP. SEE PRECAST RISER RING FOR 2'-0" DIAMETER STRUCTURE.

THE MAXIMUM INSIDE DIAMETER OF PIPES ENTERING OR LEAVING PRECAST DRAINAGE STRUCTURES SHALL BE 2'-0" LESS THAN THE INSIDE DIAMETER OF THE DRAINAGE STRUCTURE. A PIPE LEAVING A 2'-0" DIAMETER DRAINAGE STRUCTURE IS ALLOWED TO HAVE 1'-0" INSIDE DIAMETER OR LESS.

THE NUMBER OF PIPE OPENINGS IN A RISER SHALL BE DETERMINED BY THE DESIGNER. SPACING BETWEEN OPENINGS SHALL BE 1'-0" MINIMUM. OPENINGS MAY BE CONSTRUCTED BY CASTING OR SCRIBING IN PRECAST STRUCTURES DURING FABRICATION OR BY CORING THE CURED CONCRETE.

PRECAST CONCRETE FOOTINGS OR BASES SHALL BE REINFORCED WITH #4 BARS SPACED AT 1'-0" BOTH WAYS OR WITH TWO LAYERS OF WELDED WIRE FABRIC OF EQUIVALENT CROSS SECTIONAL AREA LAID AT RIGHT ANGLES AND WIRED TOGETHER. REINFORCEMENT SHALL BE PLACED IN TOP OF FOOTING AND SHALL BE MARKED.

PRECAST CONCRETE FOOTINGS SHALL BE SUPPORTED BY A COMPACTED 6" GRANULAR SUBBASE.

THE MINIMUM WALL THICKNESS FOR ALL 2'-0", 4'-0", 5'-0", AND 6'-0" DRAINAGE STRUCTURES USING CONCRETE BLOCK, BRICK, OR CAST-IN-PLACE CONCRETE SHALL BE AS SPECIFIED IN TYPICAL WALL SECTIONS.

THE CONICAL SECTION OF MANHOLES OR CATCH BASINS CONSTRUCTED OF BLOCK OR BRICK SHALL BE SHROUDED WITH GEOTEXTILE FABRIC TO A MINIMUM DEPTH OF 5'-0" OR THROUGH THE FROST ZONE. ENOUGH GEOTEXTILE MATERIAL SHALL BE LEFT ON THE TOP (8" OR MORE) TO ROLL OVER THE TOP OF THE CONE.

PREFORMED HIGH DENSITY POLYSTYRENE FILLER PIECES MAY BE USED TO CHANNEL FLOW IN THE BOTTOM OF MANHOLES PROVIDED THEY HAVE AT LEAST 2" OF CONCRETE COVER. THE USE OF THIS MATERIAL FOR CHANNEL FLOW IS RESTRICTED TO MANHOLES WHERE THE BOTTOM SECTION IS NOT SUBJECT TO FREEZING. THE USE OF THIS MATERIAL MUST BE APPROVED BY THE ENGINEER.

MICHIGAN DEPARTMENT OF TRANSPORTATION
BUREAU OF DEVELOPMENT STANDARD PLAN FOR

DRAINAGE STRUCTURES

F.H.W.A. APPROVAL	6-15-2016 PLAN DATE	R-1-G	SHEET 9 OF 9

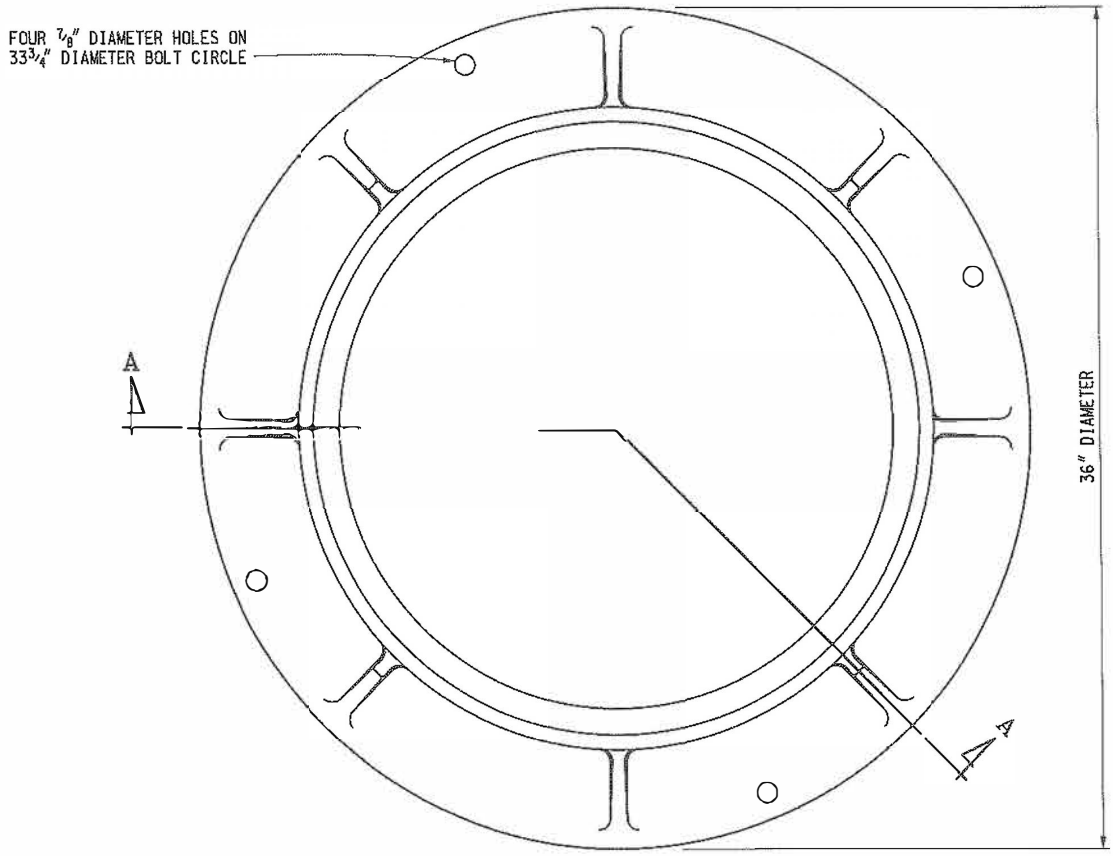

TOP VIEW OF FRAME

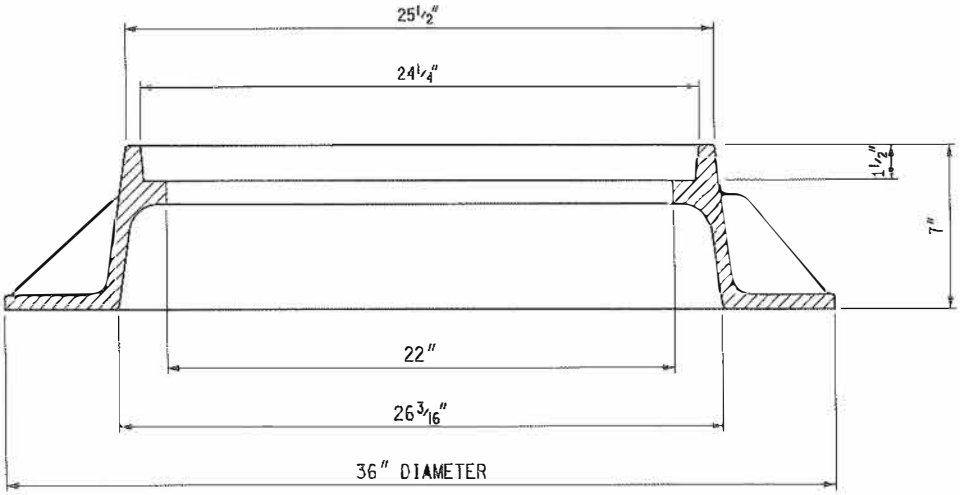

SECTION A - A

MDOT Michigan Department of Transportation PREPARED BY DESIGN DIVISION DRAWN BY: B.L.T. CHECKED BY: W.K.P.	DEPARTMENT DIRECTOR Kirk T. Steudle APPROVED BY: DIRECTOR, BUREAU OF FIELD SERVICES APPROVED BY: DIRECTOR, BUREAU OF HIGHWAY DEVELOPMENT	MICHIGAN DEPARTMENT OF TRANSPORTATION BUREAU OF HIGHWAY DEVELOPMENT STANDARD PLAN FOR COVER B FOR USE ON MANHOLES			
		9-30-2014 F.H.W.A. APPROVAL	3-7-2014 PLAN DATE	R-7-F	SHEET 1 OF 2

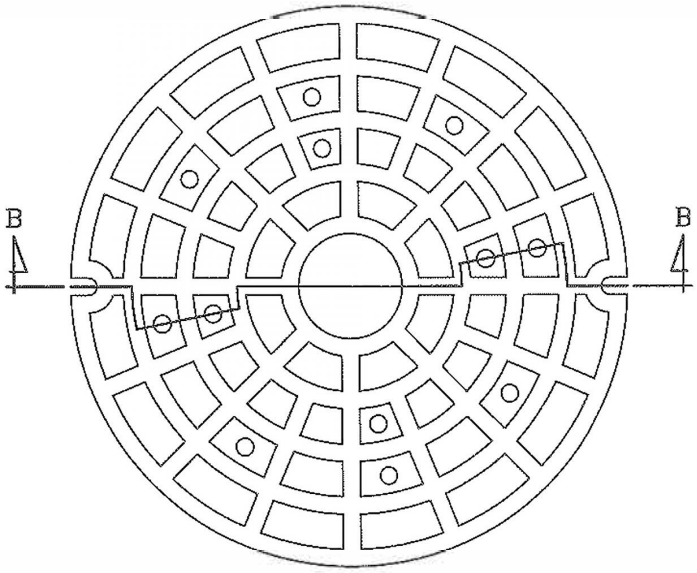

TOP VIEW OF COVER

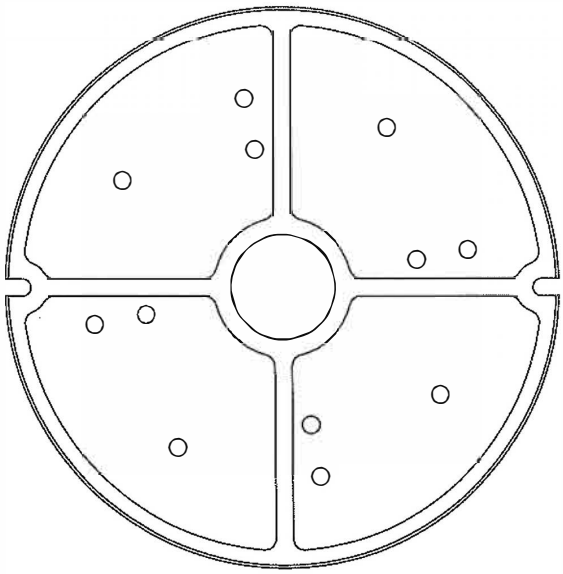

BOTTOM VIEW OF COVER

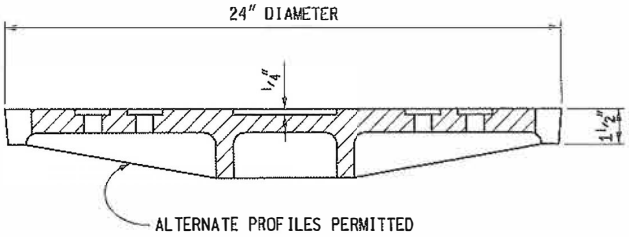

SECTION B - B

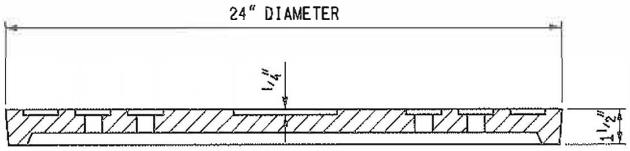

SECTION B - B

ALTERNATE PROFILE EXAMPLE

NOTES:

THE CASTINGS SHALL MEET THE REQUIREMENTS OF THE CURRENT STANDARD SPECIFICATION FOR GRAY IRON CASTINGS.

ALL CASTINGS SHALL BE CLEANED BY CURRENT APPROVED BLASTING METHODS.

THE SEATING FACE OF THE LID AND THE SEAT FOR THE SAME ON THE FRAME SHALL BE GROUND OR MACHINED SO THAT THE LID WILL HAVE AN EVEN BEARING ON ITS SEAT TO PREVENT ROCKING OR TILTING.

THE CASTINGS SHALL BE FREE OF POURING FAULTS, BLOW HOLES, CRACKS AND OTHER IMPERFECTIONS. THEY SHALL BE SOUND, TRUE TO FORM AND THICKNESS, CLEAN AND NEATLY FINISHED, AND SHALL BE COATED WITH COAL TAR PITCH VARNISH.

THIS COVER IS DESIGNED TO FIT ON ANY MANHOLE OR ON ANY EXISTING SIMILAR STRUCTURE WHEN SO DESIGNATED ON THE PLANS.

MICHIGAN DEPARTMENT OF TRANSPORTATION
BUREAU OF HIGHWAY DEVELOPMENT STANDARD PLAN FOR

COVER B
FOR USE ON MANHOLES

9-30-2014	3-7-2014	R-7-F	SHEET
F.H.W.A. APPROVAL	PLAN DATE		2 OF 2

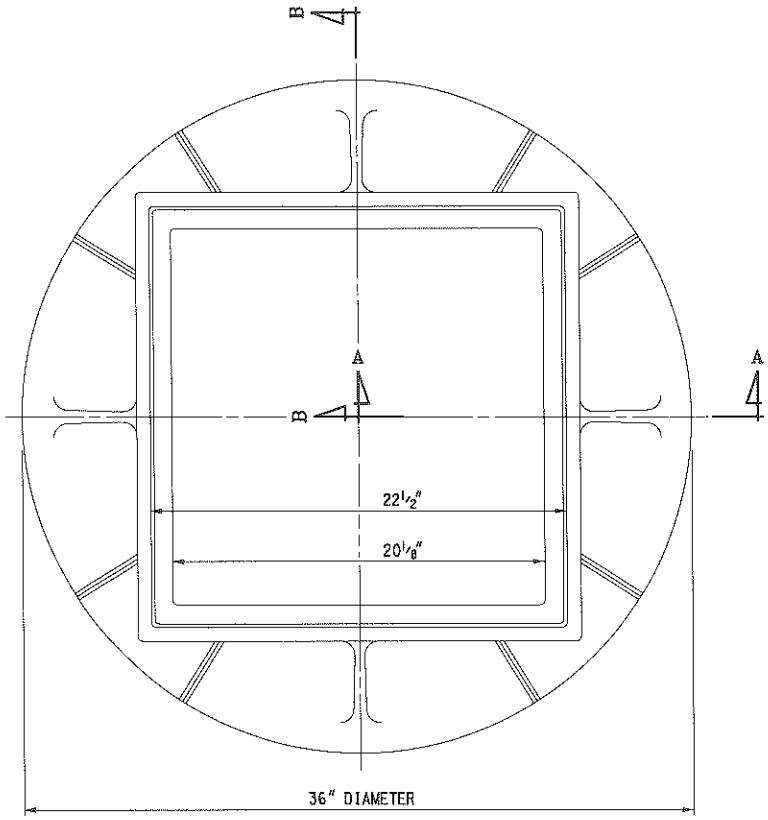

PLAN VIEW OF FRAME

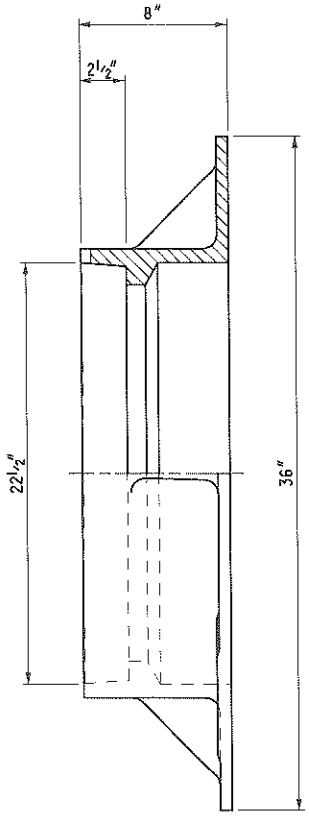

HALF FRONT ELEVATION SECTION B - B

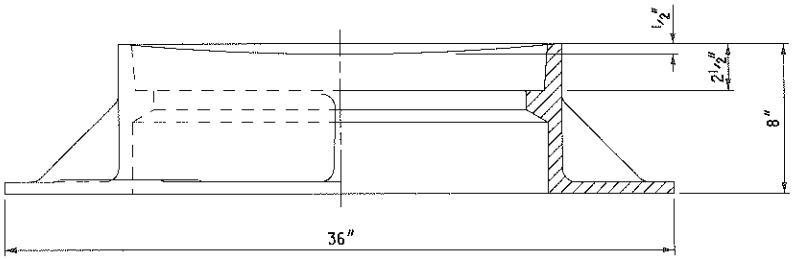

HALF SIDE ELEVATION SECTION A - A

MDOT Michigan Department of Transportation PREPARED BY DESIGN DIVISION DRAWN BY: B.L.T. CHECKED BY: W.K.P.	DEPARTMENT DIRECTOR Kirk T. Steudle APPROVED BY: Randy Van Portfleet DIRECTOR, BUREAU OF FIELD SERVICES APPROVED BY: Mark A. Van Port Fleet DIRECTOR, BUREAU OF HIGHWAY DEVELOPMENT	MICHIGAN DEPARTMENT OF TRANSPORTATION BUREAU OF HIGHWAY DEVELOPMENT STANDARD PLAN FOR COVER D FOR USE WITH STRAIGHT CURB AND CURB & GUTTER	
		9-30-2014 F.H.W.A. APPROVAL	4-29-2014 PLAN DATE	R-9-D	SHEET 1 OF 2

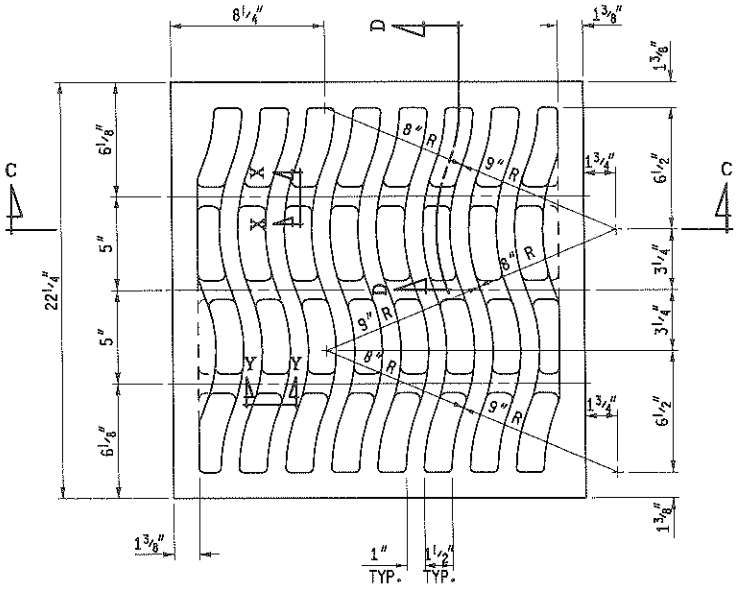

PLAN VIEW OF GRATE

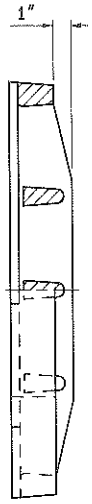

HALF FRONT ELEVATION SECTION D - D

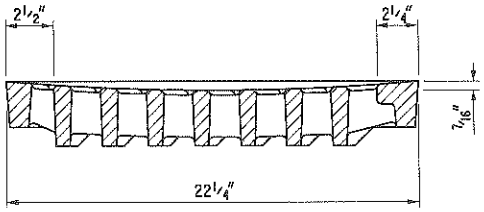

SECTION C - C

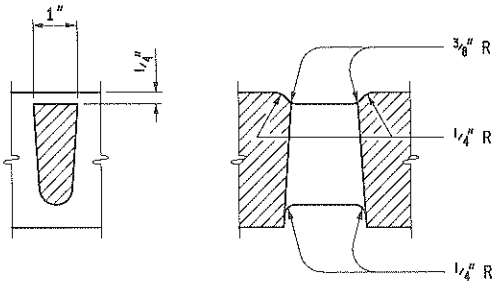

SECTION X - X SECTION Y - Y

NOTES:

THE CASTINGS SHALL MEET THE REQUIREMENTS OF THE CURRENT STANDARD SPECIFICATION FOR GRAY IRON CASTINGS.

ALL CASTINGS SHALL BE CLEANED BY CURRENT APPROVED BLASTING METHODS.

THE SEATING FACE OF THE GRATE AND THE SEAT FOR THE SAME ON THE FRAME AND THE CURB BOX SHALL BE GROUND SO THAT THE GRATE WILL HAVE AN EVEN BEARING ON ITS SEAT TO PREVENT ROCKING OR TILTING.

THE CASTINGS SHALL BE FREE OF POURING FAULTS, BLOW HOLES, CRACKS AND OTHER IMPERFECTIONS. THEY SHALL BE SOUND, TRUE TO FORM AND THICKNESS, CLEAN AND NEATLY FINISHED, AND SHALL BE COATED WITH COAL TAR PITCH VARNISH.

THIS COVER IS DESIGNED TO FIT ON ANY INLET, CATCH BASIN OR ON ANY EXISTING SIMILAR STRUCTURE WHEN SO DESIGNATED ON THE PLANS.

MICHIGAN DEPARTMENT OF TRANSPORTATION
BUREAU OF HIGHWAY DEVELOPMENT STANDARD PLAN FOR

COVER D

FOR USE WITH
STRAIGHT CURB AND CURB & GUTTER

9-30-2014	4-29-2014	R-9-D	SHEET
F.H.W.A. APPROVAL	PLAN DATE		2 OF 2

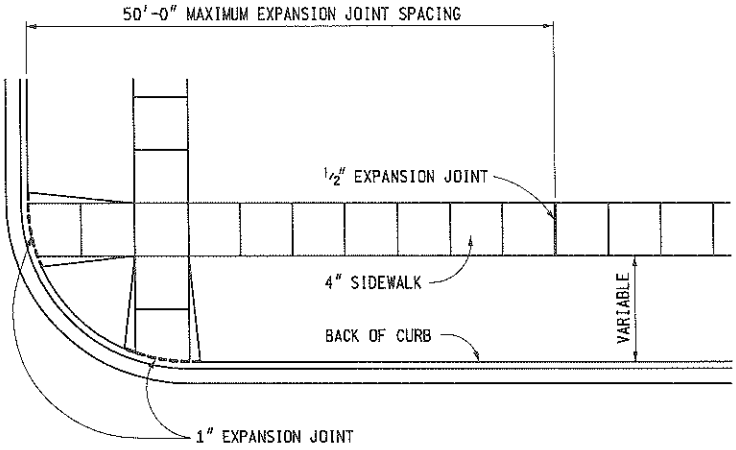

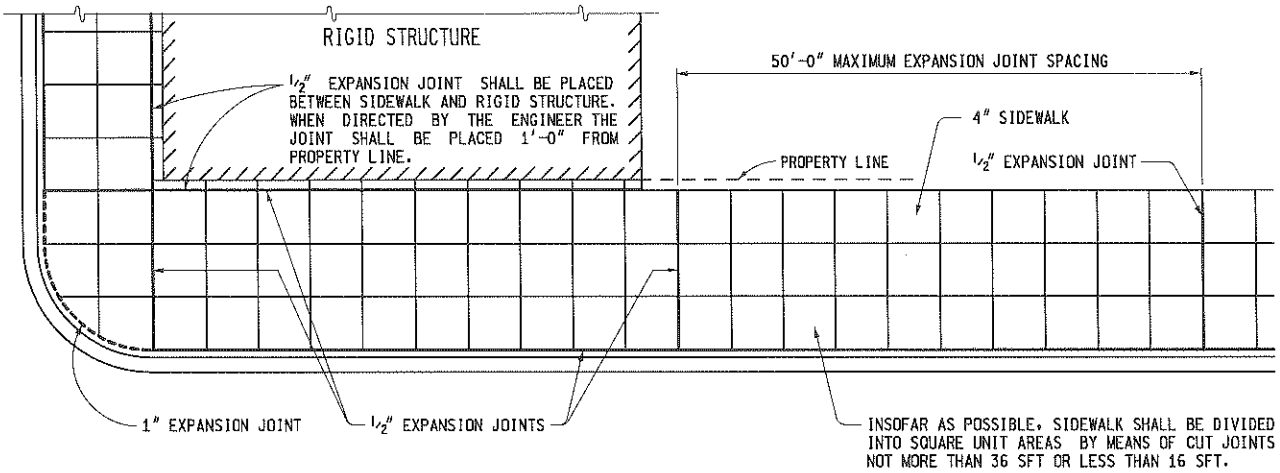

LOCATION OF JOINTS IN CONCRETE SIDEWALK

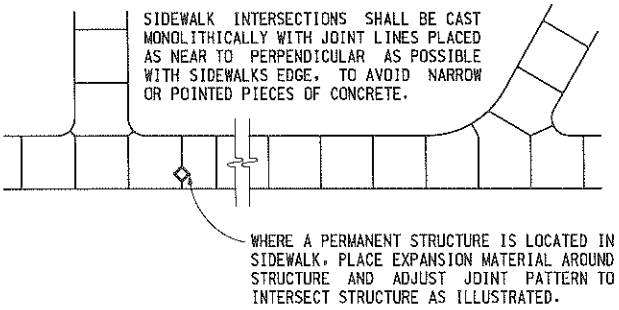

TYPICAL SIDEWALK JOINT LAYOUTS

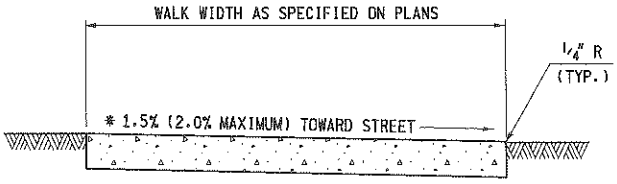

* SEE NOTES

4" CONCRETE SIDEWALK

MDOT Michigan Department of Transportation PREPARED BY DESIGN DIVISION DRAWN BY: B.L.T. CHECKED BY: W.K.P.	DEPARTMENT DIRECTOR Kirk T. Steudle APPROVED BY: Randy Van Portfleet DIRECTOR, BUREAU OF FIELD SERVICES APPROVED BY: Mark A. Van Port Fleet DIRECTOR, BUREAU OF HIGHWAY DEVELOPMENT	MICHIGAN DEPARTMENT OF TRANSPORTATION BUREAU OF HIGHWAY DEVELOPMENT STANDARD PLAN FOR DRIVEWAY OPENINGS & APPROACHES, AND CONCRETE SIDEWALK	
		9-30-2014 F.H.W.A. APPROVAL	7-1-2014 PLAN DATE	R-29-I	SHEET 1 OF 4

NOTE:
W = MINIMUM WIDTH OF THICKENED CONCRETE SIDEWALK.
(R - d) SHALL NOT BE LESS THAN DRIVEWAY WIDTH.

THE "R" DIMENSION IS SPECIFIED IN THE PUBLICATION "ADMINISTRATIVE RULES REGULATING DRIVEWAYS, BANNERS AND PARADES ON OR OVER HIGHWAYS".

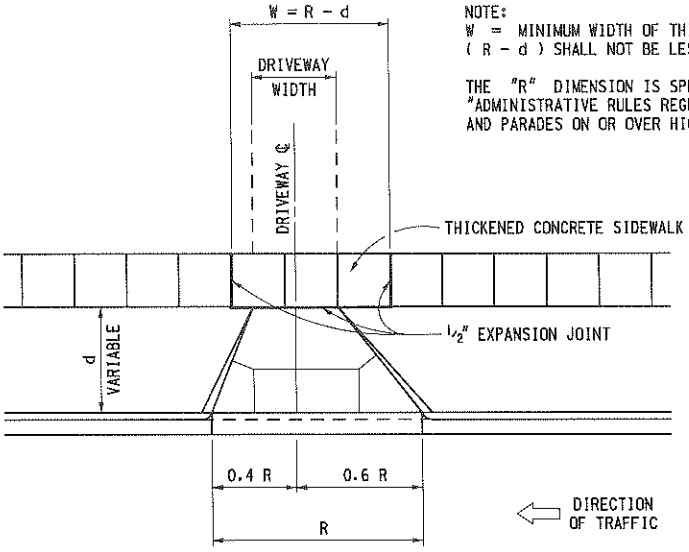

CONCRETE DRIVEWAY OPENING LAYOUT

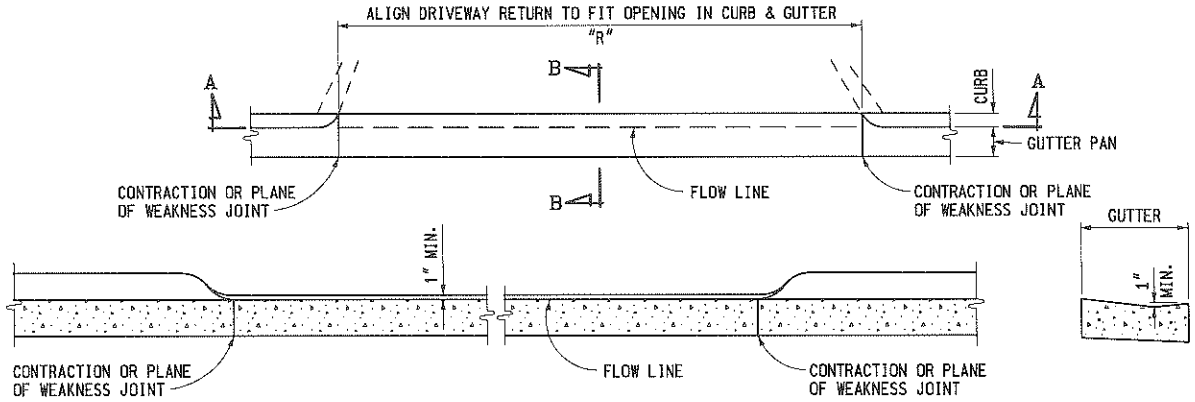

SECTION A - A

SECTION B - B

CONCRETE DRIVEWAY OPENING, DETAIL L

** TO FRONT EDGE OF GUTTER PAN

*** USE "W" JOINT IF THE DRIVEWAY AND CURB ARE POURED MONOLITHICALLY OR SYMBOL "B" JOINT IF THEY ARE POURED IN STAGES.

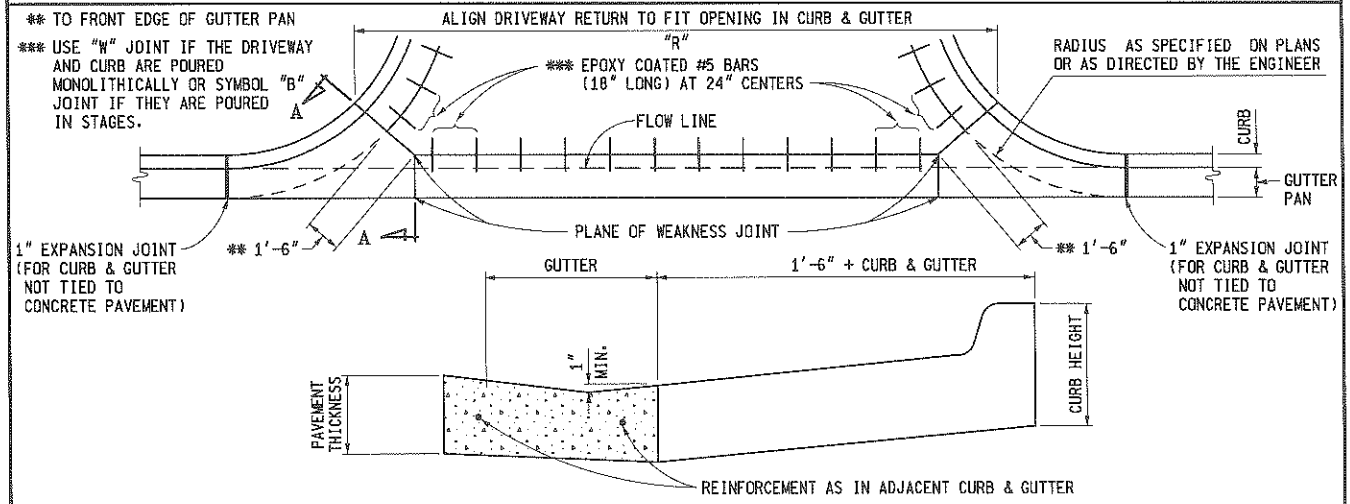

SECTION A - A

CONCRETE DRIVEWAY OPENING, DETAIL M

NOTE:
FOR ROADWAYS WITH CONCRETE PAVEMENTS, LONGITUDINAL LANE TIES WILL BE CONTINUOUS THROUGH THE DRIVEWAY OPENING AND THE SPACING OF THE #5 BARS IN CONCRETE DRIVEWAYS SHALL BE ADJUSTED TO AVOID CONFLICT WITH THE LONGITUDINAL LANE TIES.

MICHIGAN DEPARTMENT OF TRANSPORTATION
BUREAU OF HIGHWAY DEVELOPMENT STANDARD PLAN FOR

DRIVEWAY OPENINGS & APPROACHES, AND CONCRETE SIDEWALK

9-30-2014 F.H.W.A. APPROVAL	7-1-2014 PLAN DATE	R-29-I	SHEET 2 OF 4

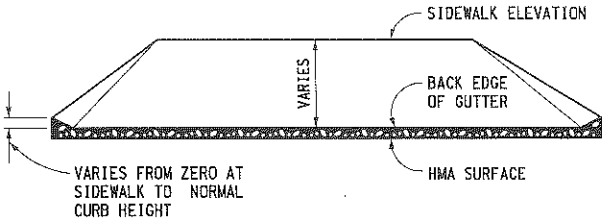

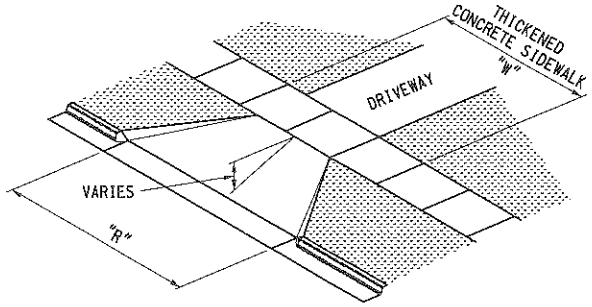

HMA DRIVEWAY APPROACH

(TO BE USED WITH DETAIL L)

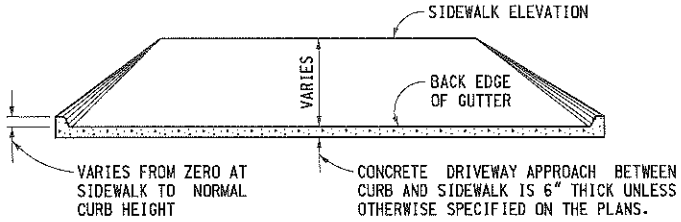

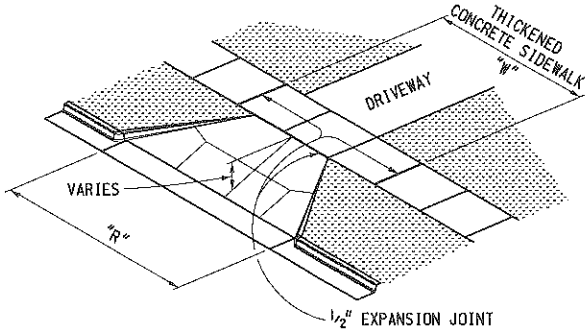

NOTES:

MONOLITHIC CURB IS INCLUDED IN THE CONCRETE DRIVEWAY APPROACH QUANTITY.

REINFORCEMENT IS NOT REQUIRED UNLESS SPECIFIED ON THE PLANS. WHEN REINFORCEMENT IS SPECIFIED, SEE CHART ON THIS SHEET.

CONCRETE DRIVEWAY APPROACH

(TO BE USED WITH DETAIL L OR M)

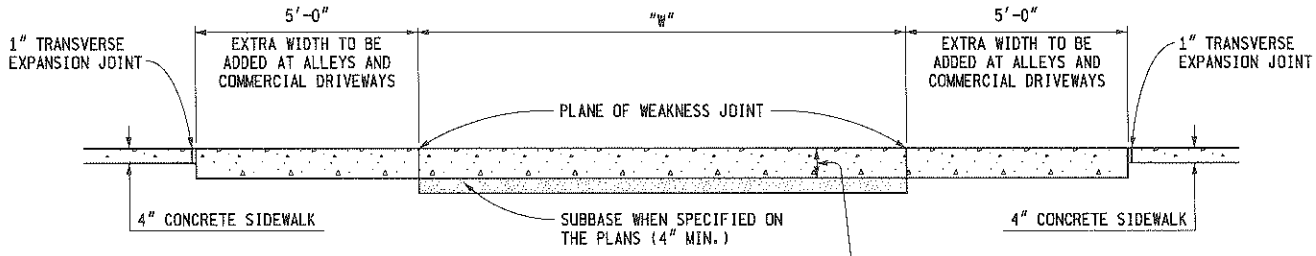

WHEN CONCRETE DRIVEWAY APPROACH IS SPECIFIED, THE THICKENED CONCRETE SIDEWALK THICKNESS IS EQUAL TO THE THICKNESS OF THE CONCRETE DRIVEWAY APPROACH. WHEN HMA DRIVEWAY APPROACH IS SPECIFIED, THE THICKENED CONCRETE SIDEWALK THICKNESS IS 6" MIN.

THICKENED CONCRETE SIDEWALK

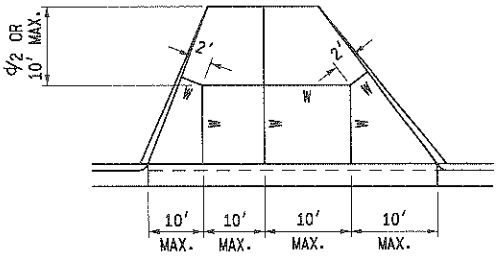

ADJUST DRIVEWAY JOINTS AS NEEDED TO ALIGN WITH ANY COINCIDING TRANSVERSE PAVEMENT JOINTS.

JOINT LAYOUT IS AS INDICATED OR AS DIRECTED BY THE ENGINEER.

INTERMEDIATE DRIVEWAY JOINT DETAILS

REINFORCEMENT FOR CONCRETE DRIVEWAYS		
CONCRETE DRIVEWAY THICKNESS	WIRE SIZE (6" x 6" MESH)	AVERAGE WEIGHT (LBS/100 SFT)
LESS THAN 8"	W1.4	21
	W2.9	42
8" OR GREATER	USE WIRE FABRIC REINFORCEMENT SPECIFIED ON STANDARD PLAN R-37-SERIES	

MICHIGAN DEPARTMENT OF TRANSPORTATION
BUREAU OF HIGHWAY DEVELOPMENT STANDARD PLAN FOR

DRIVEWAY OPENINGS & APPROACHES, AND CONCRETE SIDEWALK

9-30-2014	7-1-2014	R-29-I	SHEET
F.H.W.A. APPROVAL	PLAN DATE		3 OF 4

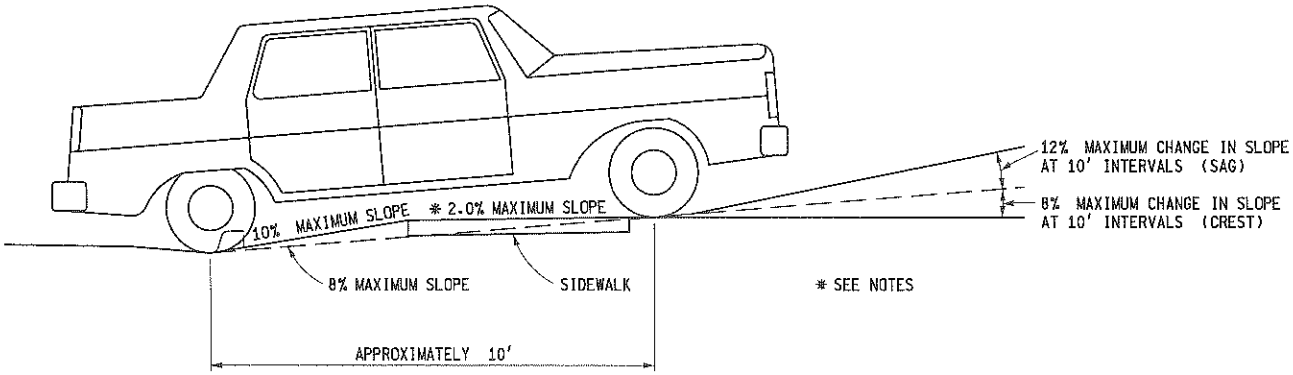

LOW VOLUME COMMERCIAL OR RESIDENTIAL DRIVEWAY SLOPES

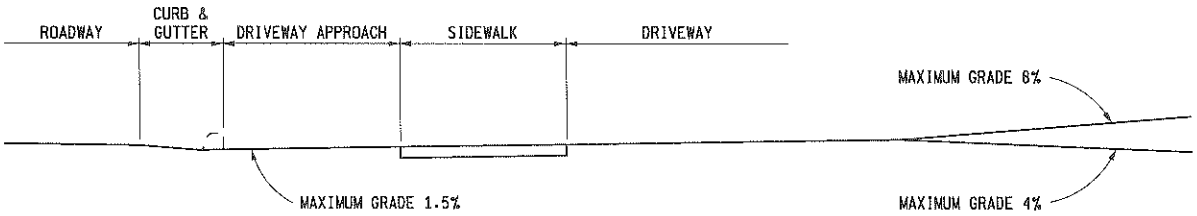

COMMERCIAL DRIVEWAY PROFILE FOR MAJOR TRAFFIC GENERATORS

NOTES:

FOR DRIVEWAY DESIGN REFER ALSO TO "ADMINISTRATIVE RULES REGULATING DRIVEWAYS, BANNERS, AND PARADES ON OR OVER HIGHWAYS" AND GEOMETRIC DESIGN G-680-SERIES, COMMERCIAL DRIVEWAYS.

FOR CURB AND GUTTER DETAILS, SEE STANDARD PLAN R-30-SERIES.

TRANSVERSE SIDEWALK SLOPES ARE TYPICALLY 1.5% (2.0% MAXIMUM). IN ORDER TO MEET SITE CONDITIONS, IF THE TRANSVERSE SLOPE IS REQUIRED TO BE LESS THAN 1.5%, LONGITUDINAL DRAINAGE MUST BE PROVIDED.

WHEN SETTING GRADES FOR COMMERCIAL DRIVES, THE TYPES OF VEHICLES USING THE DRIVE SHOULD BE CONSIDERED.

MICHIGAN DEPARTMENT OF TRANSPORTATION
BUREAU OF HIGHWAY DEVELOPMENT STANDARD PLAN FOR

DRIVEWAY OPENINGS
& APPROACHES,
AND CONCRETE SIDEWALK

9-30-2014	7-1-2014	R-29-I	SHEET
F.H.W.A. APPROVAL	PLAN DATE		4 OF 4

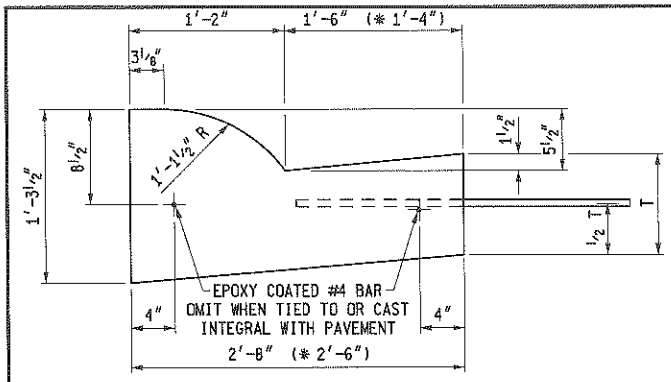

(* GUTTER PAN WIDTH MAY BE REDUCED WHEN APPROVED BY THE ENGINEER)

DETAIL	DIMENSION T	LANE TIES	CONCRETE CYD / LFT	CONCRETE CYD / LFT
B1	9"	AS SHOWN	0.0900	(* 0.0855)
B2	9"	OMITTED	0.0900	(* 0.0855)
B3	10"	AS SHOWN	0.0941	(* 0.0894)

B

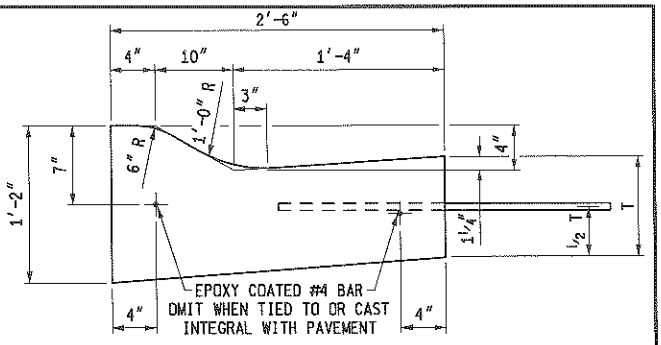

DETAIL	DIMENSION T	LANE TIES	CONCRETE CYD / LFT
D1	9"	AS SHOWN	0.0788
D2	9"	OMITTED	0.0788
D3	10"	AS SHOWN	0.0826

D

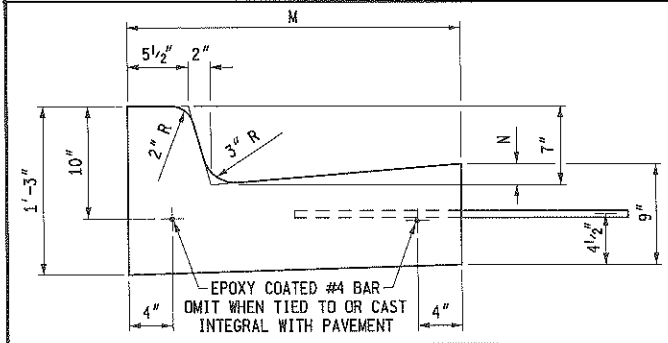

DETAIL	DIMENSION M	DIMENSION N	LANE TIES	CONCRETE CYD / LFT
C1	1'-6"	7/8"	AS SHOWN	0.0506
C2	1'-6"	7/8"	OMITTED	0.0506
C3	2'-0"	1 3/8"	AS SHOWN	0.0632
C4	2'-0"	1 3/8"	OMITTED	0.0632
C5	2'-6"	1 7/8"	AS SHOWN	0.0757
C6	2'-6"	1 7/8"	OMITTED	0.0757

C

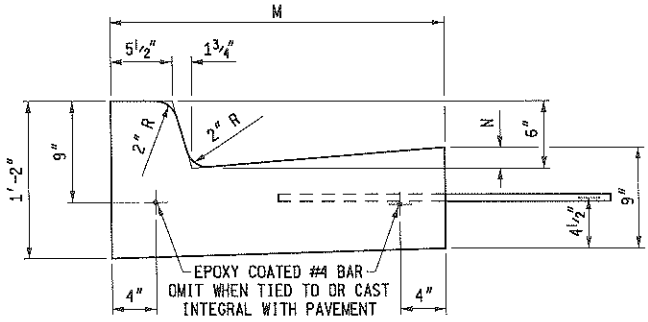

DETAIL	DIMENSION M	DIMENSION N	LANE TIES	CONCRETE CYD / LFT
F1	1'-6"	7/8"	AS SHOWN	0.0484
F2	1'-6"	7/8"	OMITTED	0.0484
F3	2'-0"	1 3/8"	AS SHOWN	0.0610
F4	2'-0"	1 3/8"	OMITTED	0.0610
F5	2'-6"	1 7/8"	AS SHOWN	0.0737
F6	2'-6"	1 7/8"	OMITTED	0.0737

F

* WHEN OTHER THAN 7" (4" MIN. TO 9" MAX.) FACE EXPOSURE IS SPECIFIED ON PLANS, VARY TOTAL CURB HEIGHT AND BATTER ACCORDINGLY

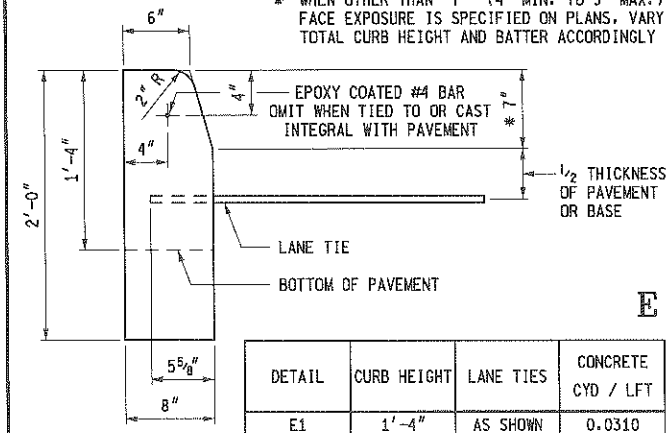

E

DETAIL	CURB HEIGHT	LANE TIES	CONCRETE CYD / LFT
E1	1'-4"	AS SHOWN	0.0310
E2	1'-4"	OMITTED	0.0310
E4	2'-0"	OMITTED	0.0477

MDOT Michigan Department of Transportation

PREPARED BY DESIGN DIVISION

DRAWN BY: B.L.T.

CHECKED BY: W.K.P.

DEPARTMENT DIRECTOR
Kirk T. Steudle

APPROVED BY: Randy Van Portfleet
DIRECTOR, BUREAU OF FIELD SERVICES

APPROVED BY: Mark A. Van Port Fleet
DIRECTOR, BUREAU OF HIGHWAY DEVELOPMENT

MICHIGAN DEPARTMENT OF TRANSPORTATION
BUREAU OF HIGHWAY DEVELOPMENT STANDARD PLAN FOR

CONCRETE CURB AND CONCRETE CURB & GUTTER

9-30-2014	2-6-2014	R-30-G	SHEET
F.H.W.A. APPROVAL	PLAN DATE		1 OF 2

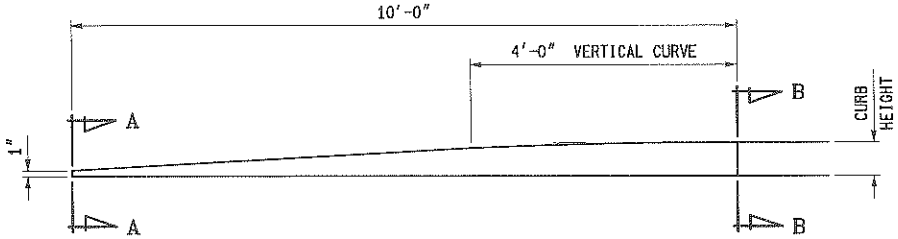

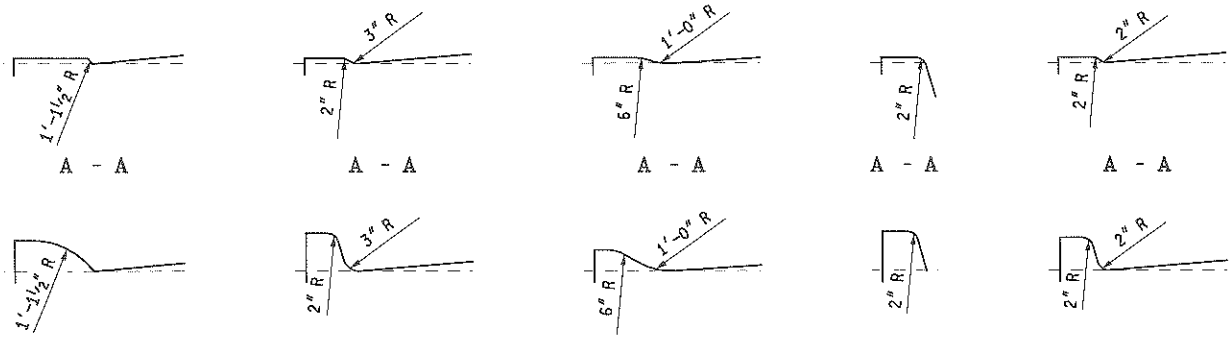

CONCRETE CURB, CURB AND GUTTER ENDINGS

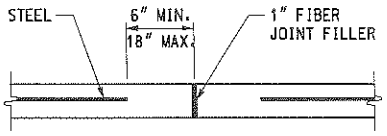

1" FIBER JOINT FILLER

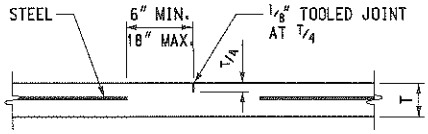

CONTRACTION JOINT

NOTES:

CURB AND GUTTER RADII SHALL BE DIMENSIONED TO THE FRONT EDGE OF THE GUTTER PAN OR EDGE OF PAVEMENT.

CONCRETE CURB AND GUTTER ENDINGS WILL BE PAID FOR IN LINEAR FEET OF THE ADJACENT CURB DETAIL.

JOINTS SHALL BE PLACED AT RIGHT ANGLES TO THE EDGE OF CONCRETE CURB AND GUTTER.

JOINTS DETAILED ON THE PLANS SHALL SUPERSEDE THOSE SPECIFIED ON THIS STANDARD PLAN.

BOTTOM SLOPE OF CURB AND GUTTER STRUCTURE MAY BE THE SAME SLOPE AS BOTTOM OF PAVEMENT. BACK OF CURB AND VERTICAL EDGE OF GUTTER PAN MAY HAVE A MAXIMUM ½" BATTER TO FACILITATE FORMING.

WHEN CURB AND GUTTER IS CAST INTEGRALLY, SEE CURRENT STANDARD PLAN R-31-SERIES.

ALL JOINTS FOR CURB OR CURB AND GUTTER ARE INCLUDED IN THE PAY ITEM FOR THE CURB OR CURB AND GUTTER.

JOINTS IN CURB OR CURB AND GUTTER NOT TIED TO CONCRETE PAVEMENT; ADJACENT TO CONCRETE BASE COURSE; OR ADJACENT TO HMA PAVEMENT:

A. PLACE 1" FIBER JOINT FILLER AT 400' MAXIMUM INTERVALS.

B. PLACE 1" FIBER JOINT FILLER AT SPRING POINTS OF INTERSECTING STREETS.

C. PLACE ½" ISOLATION JOINT AT CATCH BASINS PER STANDARD PLAN R-37-SERIES.

D. PLACE CONTRACTION JOINTS AT 40' MAXIMUM INTERVALS.

JOINTS IN CURB OR CURB AND GUTTER TIED TO JOINTED PAVEMENT

A. PLACE 1" FIBER JOINT FILLER OPPOSITE ALL TRANSVERSE EXPANSION JOINTS IN PAVEMENT.

B. PLACE ½" ISOLATION JOINT AT CATCH BASINS PER STANDARD PLAN R-37-SERIES.

C. PLACE CONTRACTION JOINTS OPPOSITE ALL TRANSVERSE CONTRACTION JOINTS IN PAVEMENT.

D. A SYMBOL (B) JOINT SHALL BE PLACED BETWEEN CURB OR CURB AND GUTTER AND ADJACENT CONCRETE PAVEMENT AS SPECIFIED ON STANDARD PLAN R-41-SERIES.

MICHIGAN DEPARTMENT OF TRANSPORTATION
BUREAU OF HIGHWAY DEVELOPMENT STANDARD PLAN FOR

CONCRETE CURB AND CONCRETE CURB & GUTTER

9-30-2014	2-6-2014	R-30-G	SHEET
F.H.W.A. APPROVAL	PLAN DATE		2 OF 2

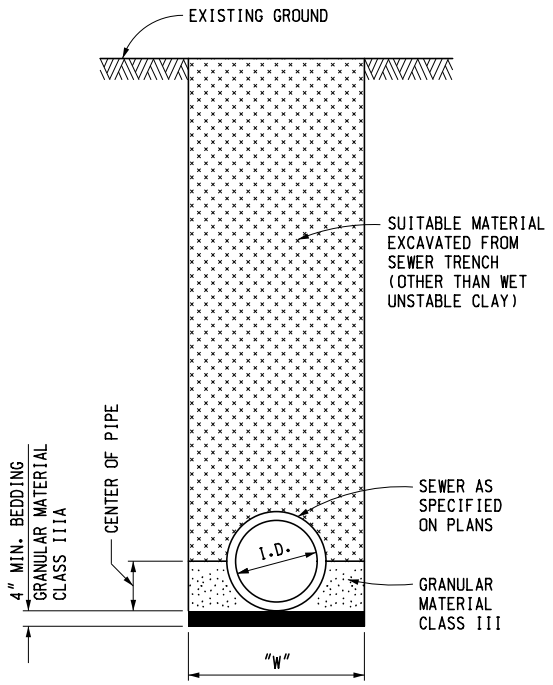

SEWER NOT UNDER ROADBED

CONCRETE

NOTE: FOR "W" SEE NOTES ON SHEET 5

A1

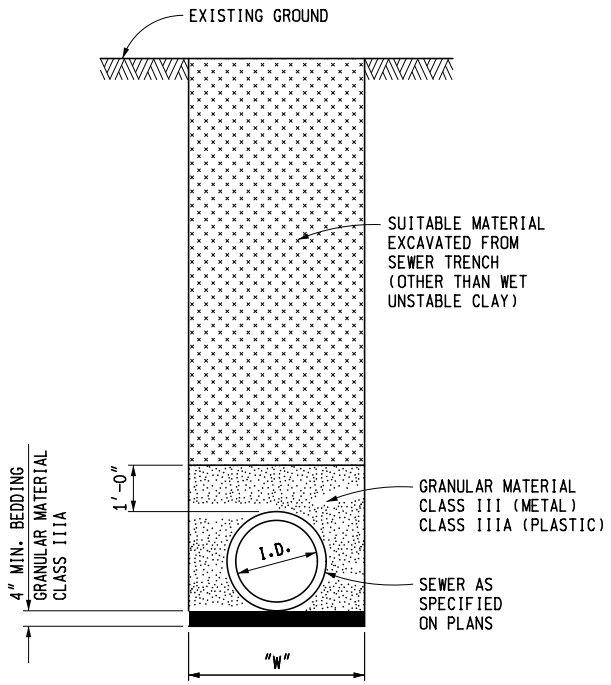

SEWER NOT UNDER ROADBED

METAL & PLASTIC

NOTE: FOR "W" SEE NOTES ON SHEET 5

A2

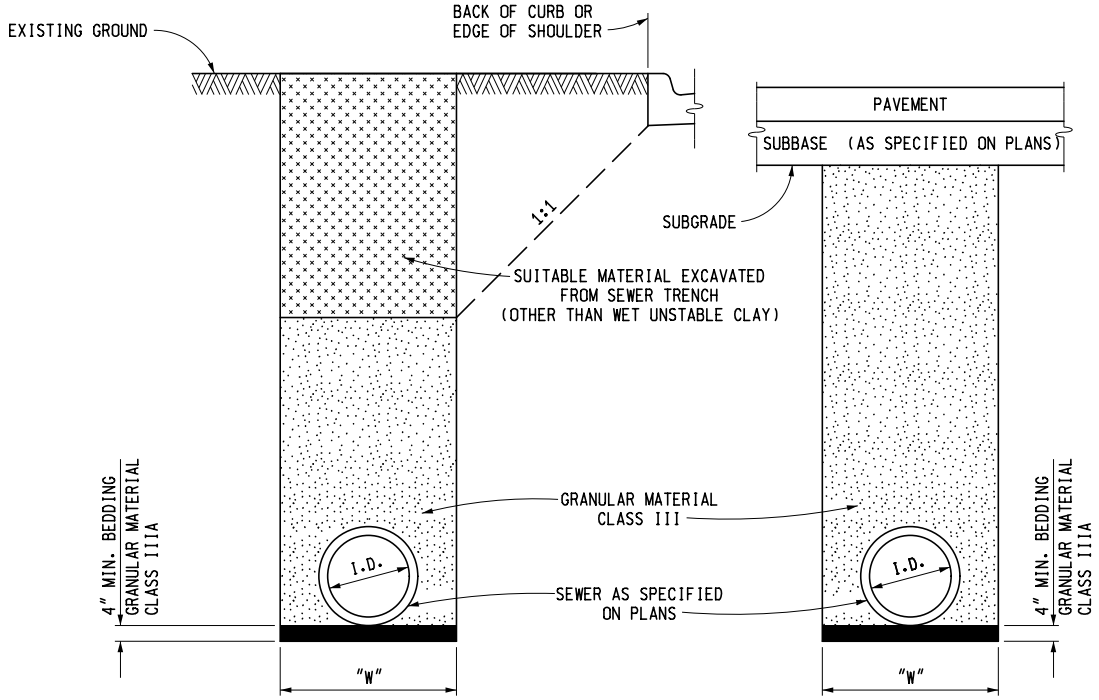

SEWER UNDER ROADBED OR WITHIN INFLUENCE OF ROADBED

CONCRETE & METAL PIPE

B1

MDOT Michigan Department of Transportation PREPARED BY DESIGN DIVISION DRAWN BY: B.L.T. CHECKED BY: W.K.P.	DEPARTMENT DIRECTOR Kirk T. Steudle APPROVED BY: _____ DIRECTOR, BUREAU OF FIELD SERVICES APPROVED BY: _____ DIRECTOR, BUREAU OF DEVELOPMENT	MICHIGAN DEPARTMENT OF TRANSPORTATION BUREAU OF DEVELOPMENT STANDARD PLAN FOR UTILITY TRENCHES			
		F.H.W.A. APPROVAL	9-4-2015 PLAN DATE	R-83-C	SHEET 1 OF 5

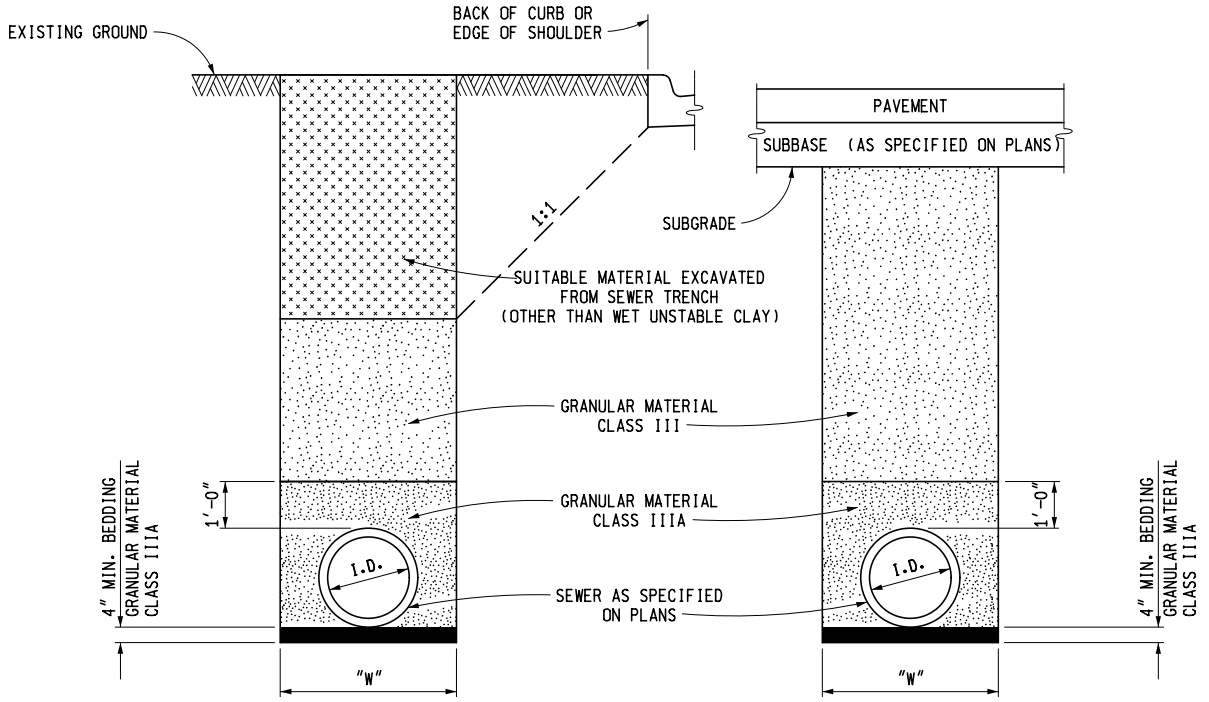

SEWER UNDER ROADBED OR WITHIN INFLUENCE OF ROADBED

PLASTIC PIPE

B2

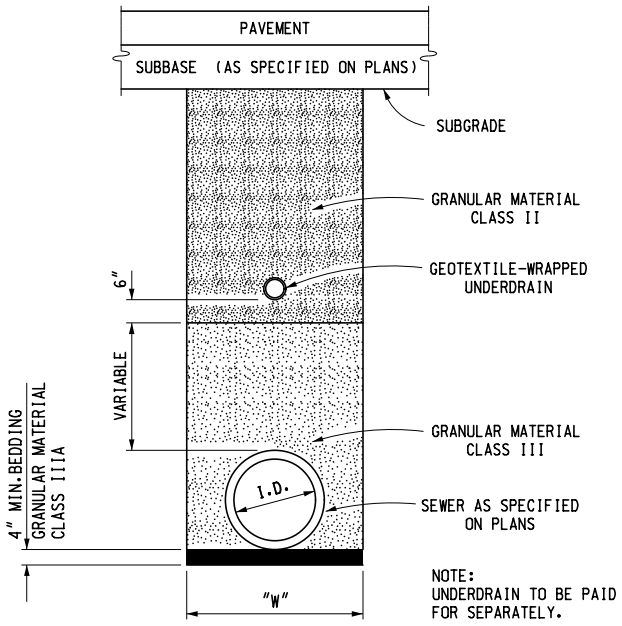

SEWER WITH UNDERDRAIN UNDER ROADBED

CONCRETE & METAL PIPE

C1

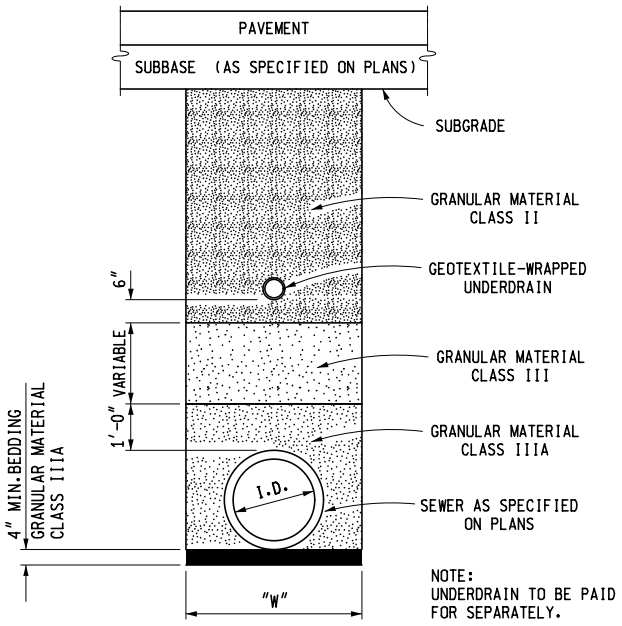

SEWER WITH UNDERDRAIN UNDER ROADBED

PLASTIC PIPE

C2

MICHIGAN DEPARTMENT OF TRANSPORTATION

BUREAU OF DEVELOPMENT STANDARD PLAN FOR

UTILITY TRENCHES

F.H.W.A. APPROVAL	9-4-2015 PLAN DATE	R-83-C	SHEET 2 OF 5

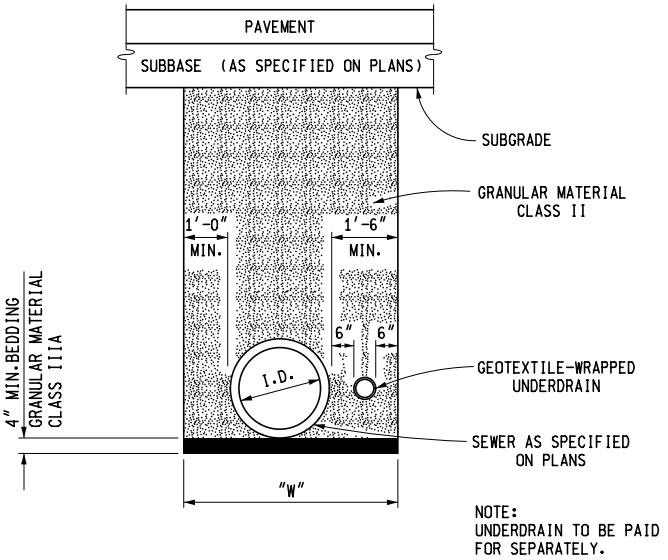

SEWER WITH UNDERDRAIN UNDER ROADBED

CONCRETE & METAL PIPE
(FOR SHALLOW SEWERS)

D1

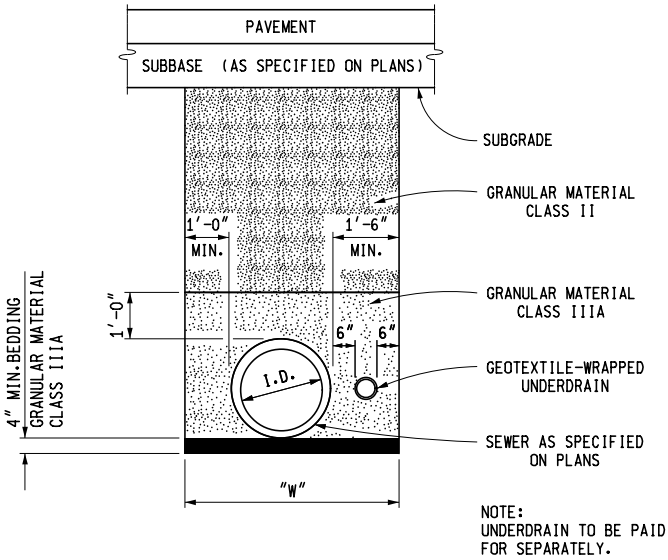

SEWER WITH UNDERDRAIN UNDER ROADBED

PLASTIC PIPE
(FOR SHALLOW SEWERS)

D2

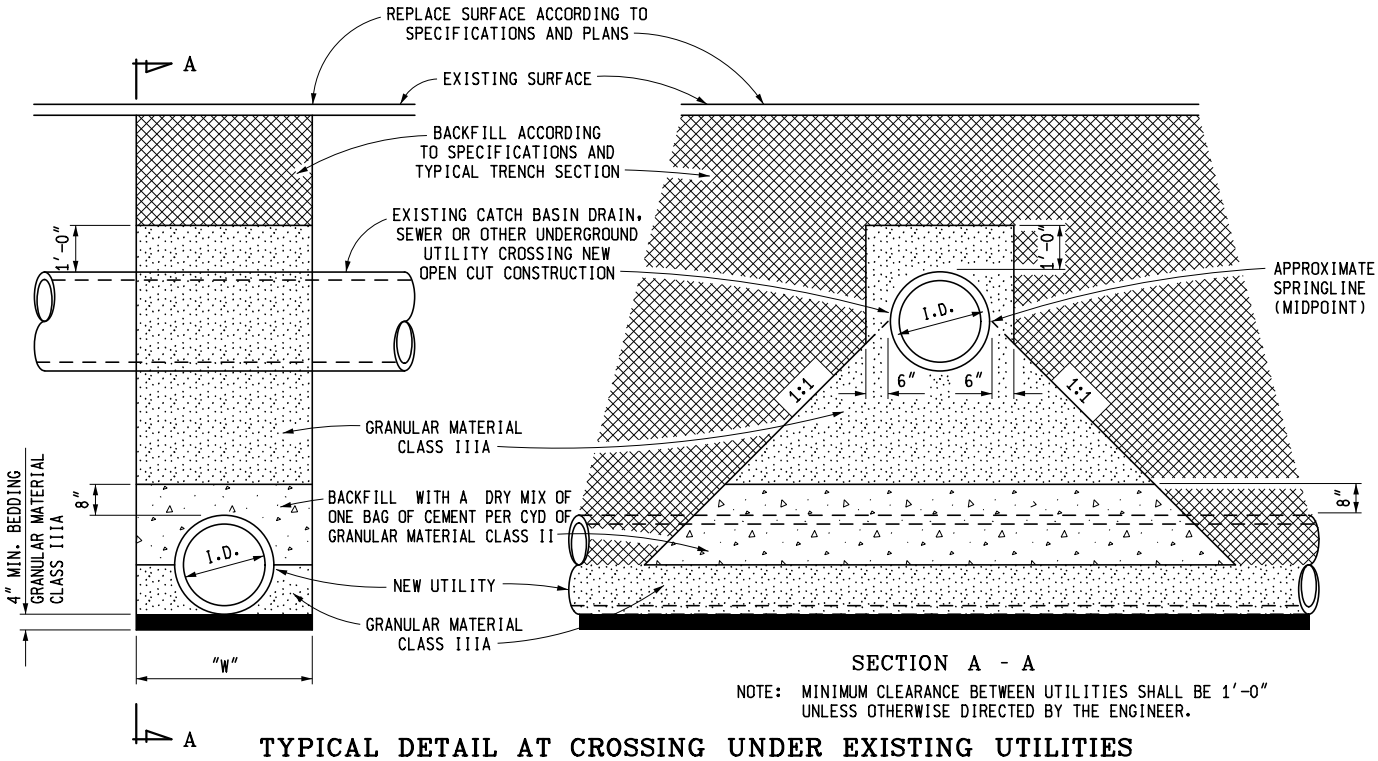

SECTION A - A

NOTE: MINIMUM CLEARANCE BETWEEN UTILITIES SHALL BE 1'-0" UNLESS OTHERWISE DIRECTED BY THE ENGINEER.

TYPICAL DETAIL AT CROSSING UNDER EXISTING UTILITIES

PAYMENT FOR THIS TRENCH DETAIL WILL BE INCLUDED WITH THE ADJACENT TRENCH DETAILS

E

MICHIGAN DEPARTMENT OF TRANSPORTATION
BUREAU OF DEVELOPMENT STANDARD PLAN FOR

UTILITY TRENCHES

F.H.W.A. APPROVAL	9-4-2015 PLAN DATE	R-83-C	SHEET 3 OF 5

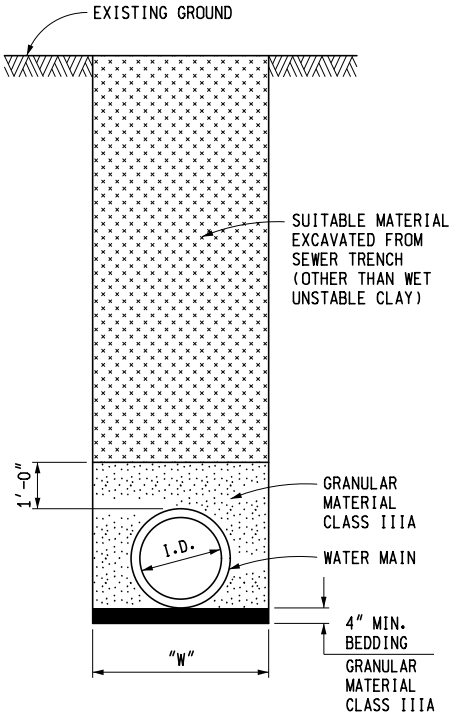

WATER MAINS NOT UNDER ROADBED F

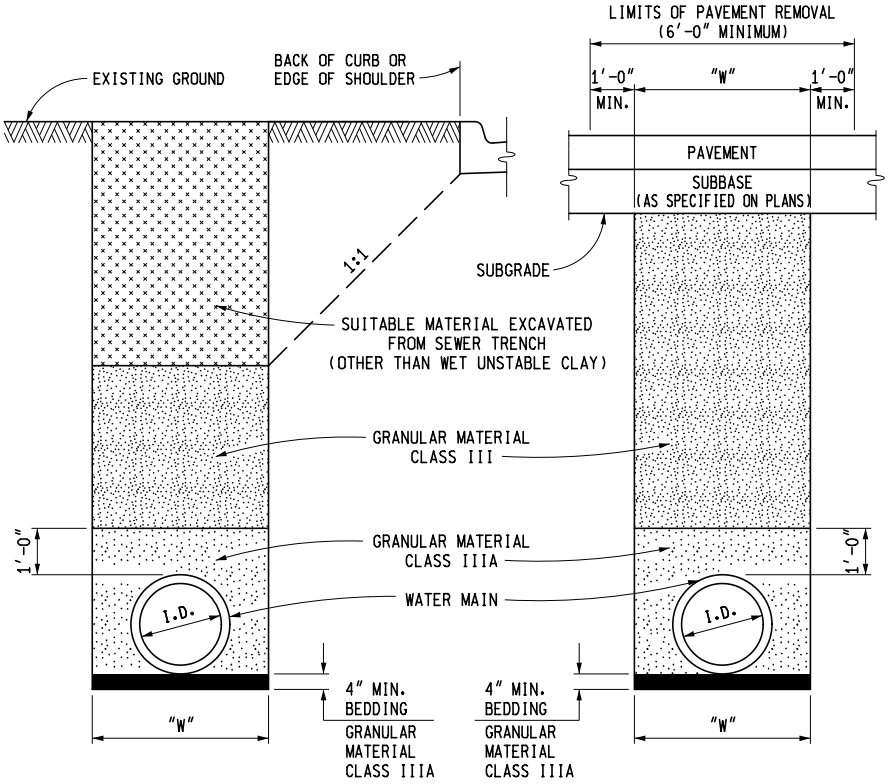

NOTE: WHEN WATER MAIN IS PLACED IN PROPOSED ROADBED AREA, IT SHALL BE BACKFILLED WITH SELECTED EXCAVATION MATERIAL ABOVE FUTURE SUBGRADE TO EXISTING GROUND LINE.

WATER MAINS UNDER ROADBED OR WITHIN INFLUENCE OF ROADBED G

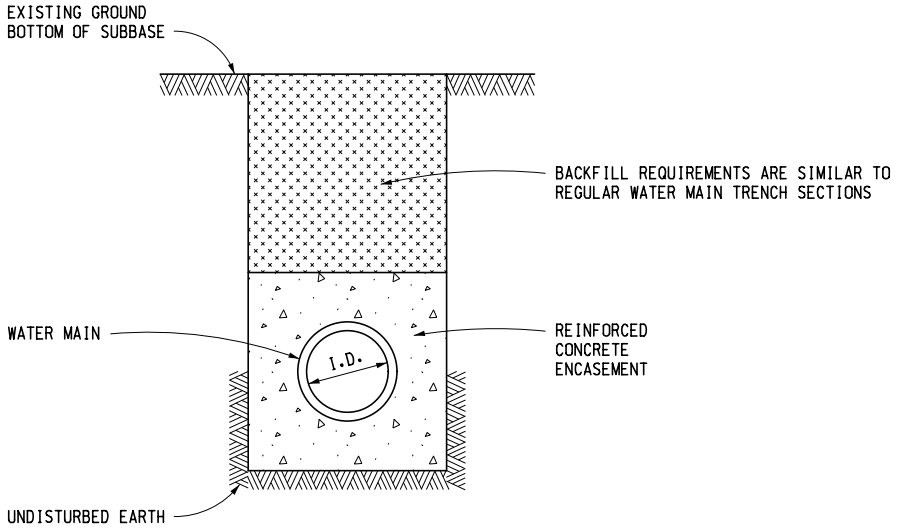

REQUIRED ENCASEMENT SIZE FOR RESPECTIVE PIPE SIZES

DIAMETER OF PIPE	ENCASEMENT SIZE AND TRENCH WIDTH
6" - 12"	3'-0"
16"	3'-6"
24"	4'-6"
30"	5'-0"
36"	5'-6"
42"	6'-0"
48"	7'-0"
54"	7'-6"
60"	8'-0"
66"	8'-6"
72"	9'-0"

NOTE:
REINFORCEMENT SHALL BE AS SPECIFIED ON PLANS.

WATER MAINS IN REINFORCED CONCRETE ENCASEMENT H

MICHIGAN DEPARTMENT OF TRANSPORTATION
BUREAU OF DEVELOPMENT STANDARD PLAN FOR

UTILITY TRENCHES

F.H.W.A. APPROVAL	9-4-2015 PLAN DATE	R-83-C	SHEET 4 OF 5

NOTES:

BACKFILLING SHALL BE ACCORDING TO THE STANDARD SPECIFICATION.

SUFFICIENT TRENCH WIDTH SHALL BE PROVIDED TO ALLOW FREE WORKING SPACE AND TO PERMIT COMPACTING THE BACKFILL AROUND THE PIPE.

THE FOLLOWING ARE MINIMUM TRENCH WIDTHS:

I.D. PIPE SIZE (INCHES)	LESS THAN 18	21	24	30	36
"W" TRENCH WIDTH (FEET)	3.0	3.5	4.0	5.0	6.0

I.D. PIPE SIZE (INCHES)	42	48	54	60	66	72
"W" TRENCH WIDTH (FEET)	7.0	8.0	9.5	10.0	10.5	11.0

I.D. PIPE SIZE (INCHES)	78	84	90	96	102	108
"W" TRENCH WIDTH (FEET)	11.5	12.0	12.5	13.0	13.5	14.0

ESTIMATED PAVEMENT REMOVAL WIDTH IS TO BE TRENCH WIDTH "W" PLUS 1'-0" EACH SIDE OF THE TRENCH (6'-0" MINIMUM).

MICHIGAN DEPARTMENT OF TRANSPORTATION
BUREAU OF DEVELOPMENT STANDARD PLAN FOR

UTILITY TRENCHES

F.H.W.A. APPROVAL	9-4-2015 PLAN DATE	R-83-C	SHEET 5 OF 5

APPLICABLE SOIL EROSION AND SEDIMENTATION CONTROL MEASURES

(COMPREHENSIVE DETAILS ARE LOCATED IN SECTION 6 OF THE SOIL EROSION & SEDIMENTATION CONTROL MANUAL)

A = SLOPES

B = STREAMS AND WATERWAYS

C = SURFACE DRAINAGEWAYS

D = ENCLOSED DRAINAGE (INLET & OUTFALL CONTROL)

E = LARGE FLAT SURFACE AREAS

F = BORROW AND STOCKPILE AREAS

G = DNRE PERMIT MAY BE REQUIRED

KEY	DETAIL	CHARACTERISTICS	A	B	C	D	E	F	G
1	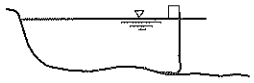 TURBIDITY CURTAIN	A Turbidity Curtain is used when slack water area is necessary to isolate construction activities from the watercourse. The still water area contains the sediments within the construction limits.		●					
2	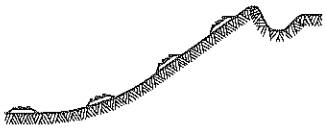 GRUBBING OMITTED	Retains existing root mat which assists in stabilizing slopes. Assists in the revegetation process by providing sprout growth. Reduces sheet flow velocities preventing rilling and gullying. Discourages off-road vehicle use.	●				●		
3	PERMANENT/TEMPORARY SEEDING	Inexpensive but effective erosion control measure to stabilize flat areas and mild slopes. Permits runoff to infiltrate soil, reducing runoff volumes. Proper preparation of the seed bed, fertilizing, mulching and watering is critical to its success.	●		●		●	●	
4	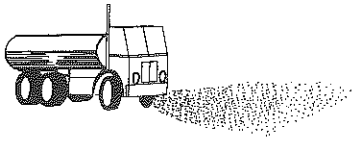 DUST CONTROL	Dust control can be accomplished by watering, and/or applying calcium chloride. The disturbed areas should be kept to a minimum. PERMANENT/TEMPORARY SEEDING (KEY 3) should be applied as soon as possible.	●				●	●	
5	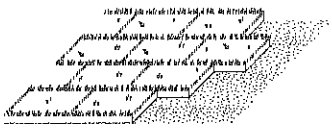 SODDING	Provides immediate vegetative cover such as at spillways and ditch bottoms. Proper preparation of the topsoil, placement of the sod, and watering is critical to its success.	●				●	●	
6	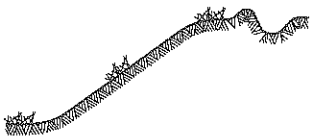 VEGETATED BUFFER STRIPS	Reduces sheet flow velocities preventing rilling and gullying. Assists in the collection of sediments by filtering runoff. Assists in the establishment of a permanent vegetative cover.	●				●		

MDOT Michigan Department of Transportation

PREPARED BY DESIGN DIVISION

DRAWN BY: B.L.T.

CHECKED BY: W.K.P.

DEPARTMENT DIRECTOR
Kirk T. Steudle

APPROVED BY: John C. Friend
ENGINEER OF DELIVERY

APPROVED BY: Mark A. Van Port Flier
ENGINEER OF DEVELOPMENT

MICHIGAN DEPARTMENT OF TRANSPORTATION
BUREAU OF HIGHWAY DEVELOPMENT STANDARD PLAN FOR

SOIL EROSION & SEDIMENTATION CONTROL MEASURES

9-10-2010	6-3-2010	R-96-E	SHEET
F.H.W.A. APPROVAL	PLAN DATE		1 OF 6

SOIL EROSION & SEDIMENTATION CONTROL MEASURES

KEY	DETAIL	CHARACTERISTICS	A	B	C	D	E	F	G
7	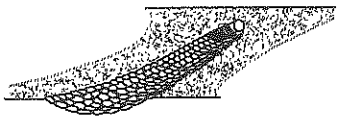 RIPRAP	Used where vegetation cannot be established. Very effective in protecting against high velocity flows. Should be placed over a geotextile liner.	●	●	●	●			●
8	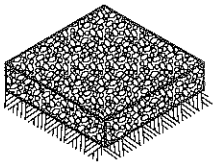 AGGREGATE COVER	Can be used in any area where a stable condition is needed for construction operations, equipment storage or in heavy traffic areas. Reduces potential soil erosion and fugitive dust by stabilizing raw areas.	●				●	●	
9	BENCHES	Reduces sheet flow velocities preventing rilling and gullying. Assists in the collection and filtering of sediments. Provides access for stabilizing slopes.	●					●	
10	DIVERSION DIKE	Assists in the diversion of runoff to a stable outlet or sediment control device. Reduces sheet flow velocities preventing rilling and gullying. Collects and diverts runoff to properly stabilized drainage ways. Works well with INTERCEPTING DITCH (KEY 11)	●				●	●	
11	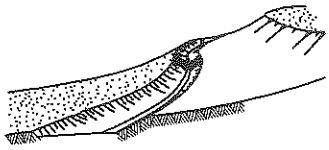 INTERCEPTING DITCH	Assists in the diversion of runoff to a stable outlet or sediment control device. Reduces sheet flow velocities preventing rilling and gullying. Works well with DIVERSION DIKE (KEY 10)	●				●	●	
12	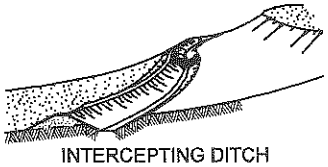 INTERCEPTING DITCH AND DIVERSION DIKE	Assists in the diversion of runoff to a stable outlet or sediment control device. Reduces sheet flow velocities preventing rilling and gullying.	●				●	●	
13	GRAVEL FILTER BERM	Useful in filtering flow prior to its reentry into a lake, stream or wetland. Works well with SEDIMENT TRAP (KEY 20) and TEMPORARY BYPASS CHANNEL (KEY 35). Not to be used in lieu of a CHECK DAM (KEY 37) in a ditch.	●		●			●	
14	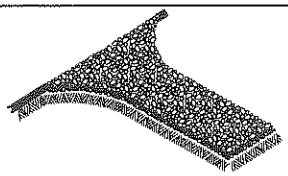 GRAVEL ACCESS APPROACH	Provides a stable access to roadways minimizing fugitive dust and tracking of materials onto public streets and highways.					●	●	

MICHIGAN DEPARTMENT OF TRANSPORTATION
BUREAU OF HIGHWAY DEVELOPMENT STANDARD PLAN FOR

SOIL EROSION & SEDIMENTATION CONTROL MEASURES

9-10-2010	6-3-2010	R-96-E	SHEET
F.H.W.A. APPROVAL	PLAN DATE		2 OF 6

KEY	DETAIL	CHARACTERISTICS	A	B	C	D	E	F	G
15	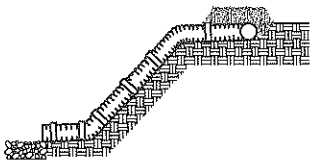 SLOPE DRAIN SURFACE	Excellent device for carrying water down slopes without creating an erosive condition. Generally used in conjunction with DIVERSION DIKE (KEY 10), INTERCEPTING DITCH (KEY 11) and INTERCEPTING DITCH AND DIVERSION DIKE (KEY 12) to direct flow to a stable discharge area or SEDIMENT TRAP (KEY 20).	●		●				
16	TREES, SHRUBS AND PERENNIALS	Trees, shrubs and perennials can provide low maintenance long term erosion protection. These plants may be particularly useful where site aesthetics are important along the roadside slopes.	●				●		
17	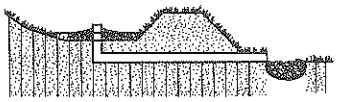 PIPE DROP	Effective way to allow water to drop in elevation very rapidly without causing an erosive condition. Also works as a sediment collector device. May be left in place as a permanent erosion control device.	●		●				
18	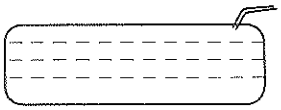 DEWATERING WITH FILTER BAG	It may be necessary to dewater from behind a cofferdam or construction dam to create a dry work site. Discharged water must be pumped to a filter bag. A GRAVEL FILTER BERM (KEY 13) may be placed downslope of the filter bag to provide additional filtration prior to entering any stream or wetland.		●					●
19	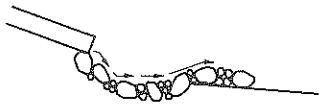 ENERGY DISSIPATORS	A device to prevent the erosive force of water from eroding soils. Used at outlets of culverts, drainage pipes or other conduits to reduce the velocity of the water. Prevents structure scouring and undermining.	●	●	●	●			
20	SEDIMENT TRAP	Used to intercept concentrated flows and prevent sediments from being transported off site or into a watercourse or wetland. The size of a Sediment Trap is 5 cubic yards or less. Works well when used with CHECK DAM (KEY 37).	●		●	●			
21	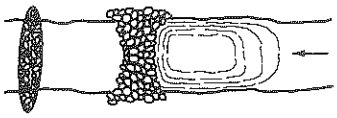 SEDIMENT BASIN	A Sediment Basin is used to trap sediments from an upstream construction site. Requires periodic inspections, repairs, and maintenance. Where practical, sediments should be contained on site. A Sediment Basin should be the last choice of sediment control. The size of a Sediment Basin is greater than 5 cubic yards.		●					●
22	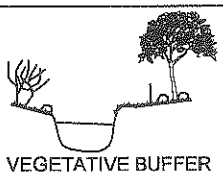 VEGETATIVE BUFFER AT WATERCOURSE	This practice is used to maintain a vegetative buffer adjacent to a watercourse. When utilized with SILT FENCE (KEY 26) it will, under normal circumstances, prevent sediment from leaving the construction site.	●	●	●		●	●	

MICHIGAN DEPARTMENT OF TRANSPORTATION
BUREAU OF HIGHWAY DEVELOPMENT STANDARD PLAN FOR

SOIL EROSION & SEDIMENTATION CONTROL MEASURES

9-10-2010 F.H.W.A. APPROVAL	6-3-2010 PLAN DATE	R-96-E	SHEET 3 OF 6

KEY	DETAIL	CHARACTERISTICS	A	B	C	D	E	F	G
23	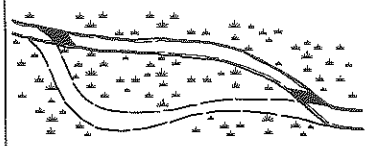 STREAM RELOCATION	A detail depicting the proper procedures for stream relocation. Maintains same width, depth, and flow velocity as the natural stream. Revegetate banks with PERMANENT/TEMPORARY SEEDING (KEY 3), MULCHING AND MULCH ANCHORING (KEY 28), MULCH BLANKETS AND HIGH VELOCITY MULCH BLANKETS (KEY 33) and woody plants to shade the stream.		●					●
24	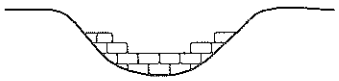 SAND AND STONE BAGS	Sand and stone bags are a useful tool in the prevention of erosion. Can be used to divert water around a construction site by creating a DIVERSION DIKE (KEY 10). Works well for creating a CONSTRUCTION DAM (KEY 36) and temporary culvert end fill.	●	●	●	●	●	●	●
25	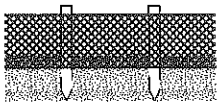 SAND FENCE AND DUNE STABILIZATION	A Sand Fence traps blowing sand by reducing wind velocities. Can be used to prevent sand from blowing onto roads. Must be maintained until sand source is stabilized.	●				●	●	
26	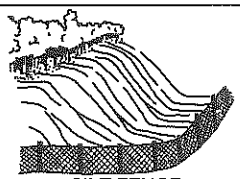 SILT FENCE	A permeable barrier erected below disturbed areas to capture sediments from sheet flow. Can be used to divert small volumes of water to stable outlets. Ineffective as a filter and should never be placed across streams or ditches where flow is concentrated.	●				●	●	
27	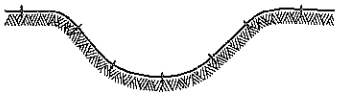 PLASTIC SHEETS OR GEOTEXTILE COVER	Plastic Sheets can be used to create a liner in temporary channels. Can also be used to create a temporary cover to prevent erosion of stockpiled materials.	●	●	●			●	
28	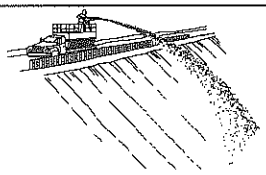 MULCHING AND MULCH ANCHORING	Anchored mulch provides erosion protection against rain and wind. Mulch must be used on seeded areas to promote water retention and growth. Should be inspected after every rainstorm and repaired as necessary until vegetation is well established.	●		●		●	●	
29	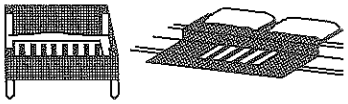 INLET PROTECTION FABRIC DROP	Provides settling and filtering of silt laden water prior to its entry into the drainage system. Can be used in median and side ditches where vegetation will be disturbed. Allows for early use of drainage systems prior to project completion.			●		●		
30	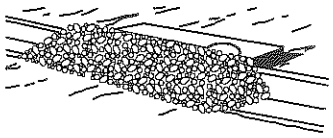 INLET PROTECTION GEOTEXTILE AND STONE	Provides settling and filtering of silt laden water prior to its entry into the drainage system. Should be used in paved areas where drainage structures are existing or proposed. Allows for early use of drainage systems prior to project completion.			●		●		

MICHIGAN DEPARTMENT OF TRANSPORTATION
BUREAU OF HIGHWAY DEVELOPMENT STANDARD PLAN FOR

SOIL EROSION & SEDIMENTATION CONTROL MEASURES

9-10-2010	6-3-2010	R-96-E	SHEET
F.H.W.A. APPROVAL	PLAN DATE		4 OF 6

SOIL EROSION & SEDIMENTATION CONTROL MEASURES

KEY	DETAIL	CHARACTERISTICS	A	B	C	D	E	F	G
31	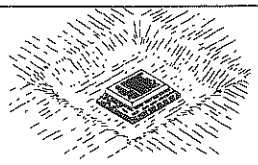 INLET PROTECTION SEDIMENT TRAP	An Inlet Protection Sediment Trap is a temporary device that can be used in areas where medium flows are anticipated. Effective in trapping small quantities of sediments prior to water entering the drainage system. Can be used in areas such as median and side ditches.			●		●		
32	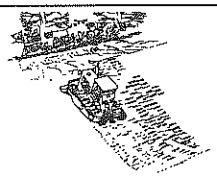 SLOPE ROUGHENING AND SCARIFICATION	A simple and economical way to reduce soil erosion by wind and water. Can be accomplished by harrowing with a disk, back blading, or tracking with a dozer perpendicular to the slope.	●				●	●	
33	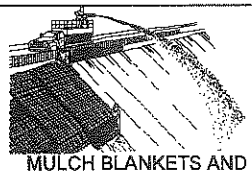 MULCH BLANKETS AND HIGH VELOCITY MULCH BLANKETS	Mulch blankets provide an immediate and effective cover over raw erodible slopes affording excellent protection against rain and wind erosion. High velocity mulch blankets work well for stabilizing the bottom of ditches in waterways.	●		●		●	●	
34	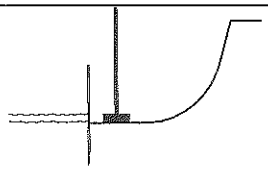 COFFERDAM	Used to create a dry construction area and protect the stream from raw erodible areas. Must be pumped dry or dewatered according to DEWATERING WITH FILTER BAG (KEY 18).		●					●
35	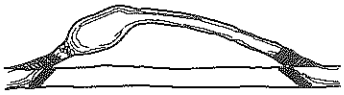 TEMPORARY BYPASS CHANNEL	Utilized when a dry construction area is needed. Isolates stream flows from raw erodible areas minimizing erosion and subsequent siltation. Can incorporate SEDIMENT BASIN (KEY 21), CHECK DAM (KEY 37), and GRAVEL FILTER BERM (KEY 13) to remove sediments from water. Construction sequence of events may be necessary.		●					●
36	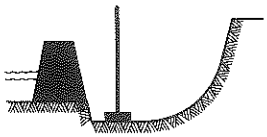 CONSTRUCTION DAM	Used to create a dry or slack water area for construction. Isolates the stream from raw erodible areas. Can be created out of any non-erodible materials such as SAND AND STONE BAGS (KEY 24), a gravel dike with clay core or plastic liner, steel plates or plywood.		●					●
37	CHECK DAM	Can be constructed across ditches or any area of concentrated flow. Protects vegetation in early stages of growth. A Check Dam is intended to reduce water velocities and capture sediment. A Check Dam is not a filtering device.	●		●			●	

MICHIGAN DEPARTMENT OF TRANSPORTATION
BUREAU OF HIGHWAY DEVELOPMENT STANDARD PLAN FOR

SOIL EROSION & SEDIMENTATION CONTROL MEASURES

9-10-2010	6-3-2010	R-96-E	SHEET
F.H.W.A. APPROVAL	PLAN DATE		5 OF 6

NOTES:

THIS STANDARD PLAN WILL SERVE AS A KEY IN THE SELECTION OF THE APPROPRIATE SOIL EROSION AND SEDIMENTATION CONTROL DETAILS. THIS PLAN ALSO PROVIDES THE KEY TO THE NUMBERED EROSION CONTROL ITEMS SPECIFIED ON THE CONSTRUCTION PLANS. REFER TO THE MDOT SOIL EROSION & SEDIMENTATION CONTROL MANUAL, SECTION 6 FOR SPECIFIC DETAILS, CONTRACT ITEMS (PAY ITEMS), AND PAY UNITS.

COLLECTED SILT AND SEDIMENT SHALL BE REMOVED PERIODICALLY TO MAINTAIN THE EFFECTIVENESS OF THE SEDIMENT TRAP, SEDIMENT BASIN, AND SILT FENCE. AGGREGATES PLACED IN STREAMS SHOULD CONTAIN A MINIMUM OF FINES.

TEMPORARY EROSION AND SEDIMENTATION CONTROL PROVISIONS SHALL BE COORDINATED WITH THE PERMANENT CONTROL MEASURES TO ASSURE EFFECTIVE CONTROL OF SEDIMENTS DURING CONSTRUCTION OF THE PROJECT.

ALL TEMPORARY EROSION CONTROL DEVICES SHALL BE REMOVED AFTER VEGETATION ESTABLISHMENT OR AT THE DISCRETION OF THE ENGINEER. CARE SHALL BE TAKEN DURING REMOVAL TO MINIMIZE SILTATION IN NEARBY DRAINAGE COURSES.

MICHIGAN DEPARTMENT OF TRANSPORTATION
BUREAU OF HIGHWAY DEVELOPMENT STANDARD PLAN FOR

SOIL EROSION & SEDIMENTATION CONTROL MEASURES

9-10-2010 F.H.W.A. APPROVAL	6-3-2010 PLAN DATE	R-96-E	SHEET 6 OF 6

PART 7 - APPENDICIES

PRE-BID DOCUMENTS

PART 1 – SIGNED BIDDER DOCUMENTS